PHILIPS

MASTER PL-S 2 Pin

CMAPLS2P



The original!

MASTER PL-S is an efficient low-wattage compact fluorescent lamp, typically used for decorative and orientation purposes. The original Philips-invented bridge technology guarantees optimum performance in the application, enabling more light and higher efficacy than the bended technology. The 2-pin version is designed for operation on electromagnetic gear and is provided with a plug-in/pull-out lamp base

Benefits

- Optimal light performance for short or long operation per switch-on
- Multiple light color choice
- Good color rendering (CRI >80)

Applications

- Application
- Designed for use in hotels, restaurants, theatres and homes
- Suitable for use in signs, corridors, security and orientation lighting

Features

- 2-pin base with a housing incorporating the special instant starter and capacitor
- Fluorescent tri-phosphor technology
- Low light depreciation over lamp life
- Use only with electromagnetic control gear
- Lamp light technical and electrical characteristics are influenced by operating conditions, i.e. lamp ambient temperature and operating position
- Dimming is not possible
- A lamp breaking is extremely unlikely to have any impact on your health. If a lamp breaks, ventilate the room for 30 minutes and remove the parts, preferably with gloves. Put them in a sealed plastic bag and take it to your local waste facilities for recycling. Do not use a vacuum cleaner.

Versions

GLIM2017177 Wioleta Sadowska



GLIM2012503 Wioleta Sadowska



Dimensional drawing

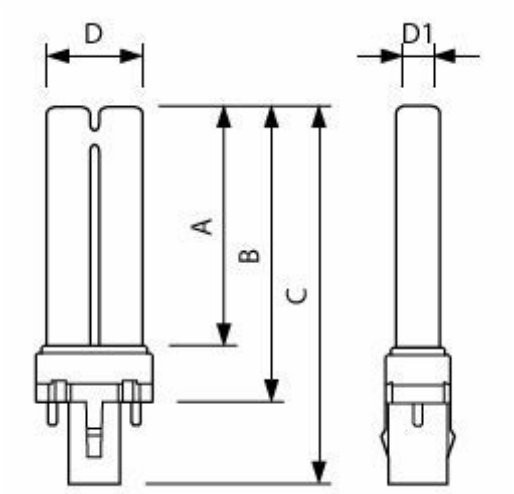

Product	D (max)	D1 (max)	A (max)	B (max)	C (max)
MASTER PL-S 11W/840/2P 1CT/10	28 mm	13 mm	198 mm	214 mm	235.8 mm
MASTER PL-S 11W/865/2P 1CT/10	28 mm	13 mm	97 mm	113 mm	135 mm
MASTER PL-S 7W/840/2P 1CT/10	28 mm	13 mm	97 mm	113 mm	135 mm
MASTER PL-S 7W/865/2P 1CT/10	28 mm	13 mm	97 mm	113 mm	135 mm
MASTER PL-S 9W/827/2P 1CT/10	28 mm	13 mm	129 mm	145 mm	167 mm
MASTER PL-S 9W/840/2P 1CT/10	28 mm	13 mm	129 mm	145 mm	167 mm
MASTER PL-S 9W/865/2P 1CT/10	28 mm	13 mm	97 mm	113 mm	135 mm

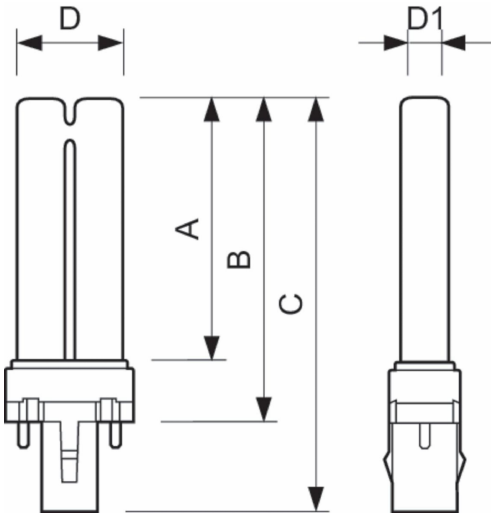

Product	D (max)	D1 (max)	C (max)
MASTER PL-S 13W/865/2P 1CT/10	27.1 mm	13 mm	178.2 mm

Light Technical

Color rendering index (CRI)	82

Controls and Dimming

Dimmable	No

Approval and Application

Mercury (Hg) Content (Nom)	1.4 mg

General Information

Order Code	Full Product Name	Cap-Base
927902886566	MASTER PL-S 13W/865/2P 1CT/10	GX23
927935684065	MASTER PL-S 7W/840/2P 1CT/10	G23
927935686565	MASTER PL-S 7W/865/2P 1CT/10	G23
927936082765	MASTER PL-S 9W/827/2P 1CT/10	G23
927936084065	MASTER PL-S 9W/840/2P 1CT/10	G23
927936086565	MASTER PL-S 9W/865/2P 1CT/10	G23
927936484065	MASTER PL-S 11W/840/2P 1CT/10	G23
927936486565	MASTER PL-S 11W/865/2P 1CT/10	G23

Light Technical

Order Code	Full Product Name	Luminous Flux	Color Designation	Correlated Color Temperature (Nom)	Luminous Efficacy (rated) (Nom)
927902886566	MASTER PL-S 13W/865/2P 1CT/10	820 lm	Cool Daylight	6500 K	63 lm/W
927935684065	MASTER PL-S 7W/840/2P 1CT/10	400 lm	Cool White (CW)	4000 K	57 lm/W
927935686565	MASTER PL-S 7W/865/2P 1CT/10	400 lm	Cool Daylight	6500 K	56.3 lm/W
927936082765	MASTER PL-S 9W/827/2P 1CT/10	600 lm	Incandescent White	2700 K	67 lm/W
927936084065	MASTER PL-S 9W/840/2P 1CT/10	600 lm	Cool White (CW)	4000 K	67 lm/W
927936086565	MASTER PL-S 9W/865/2P 1CT/10	540 lm	Cool Daylight	6500 K	62 lm/W
927936484065	MASTER PL-S 11W/840/2P 1CT/10	900 lm	Cool White (CW)	4000 K	77 lm/W
927936486565	MASTER PL-S 11W/865/2P 1CT/10	835 lm	Cool Daylight	6500 K	70 lm/W

Operating and Electrical

Order Code	Full Product Name	Power Consumption	Lamp Current (Nom)	Voltage (Nom)
927902886566	MASTER PL-S 13W/865/2P 1CT/10	13.0 W	0.290 A	56 V
927935684065	MASTER PL-S 7W/840/2P 1CT/10	7 W	0.175 A	-
927935686565	MASTER PL-S 7W/865/2P 1CT/10	7.1 W	0.175 A	46 V
927936082765	MASTER PL-S 9W/827/2P 1CT/10	8.7 W	0.170 A	-
927936084065	MASTER PL-S 9W/840/2P 1CT/10	8.7 W	0.170 A	-
927936086565	MASTER PL-S 9W/865/2P 1CT/10	8.6 W	0.170 A	60 V
927936484065	MASTER PL-S 11W/840/2P 1CT/10	11.6 W	0.155 A	-
927936486565	MASTER PL-S 11W/865/2P 1CT/10	11.6 W	0.160 A	89 V

Approval and Application

Order Code	Full Product Name	Energy Consumption kWh/1000 h
927902886566	MASTER PL-S 13W/865/2P 1CT/10	-
927935684065	MASTER PL-S 7W/840/2P 1CT/10	9 kWh
927935686565	MASTER PL-S 7W/865/2P 1CT/10	-
927936082765	MASTER PL-S 9W/827/2P 1CT/10	11 kWh
927936084065	MASTER PL-S 9W/840/2P 1CT/10	11 kWh
927936086565	MASTER PL-S 9W/865/2P 1CT/10	-
927936484065	MASTER PL-S 11W/840/2P 1CT/10	14 kWh
927936486565	MASTER PL-S 11W/865/2P 1CT/10	-

© 2026 Signify Holding. All rights reserved. The information provided herein is subject to change, without notice. Signify does not give any representation or warranty as to the accuracy or completeness of the information included herein and shall not be liable for any action in reliance thereon. The information presented in this document is not intended as any commercial offer and does not form part of any quotation or contract, unless otherwise agreed by Signify. Philips and the Philips Shield Emblem are registered trademarks of Koninklijke Philips N.V.