PHILIPS

Ledinaire surface-mounted SM065C

SM065C



Proven quality. Effortless installation. Every time. Your dependable and affordable choice for every job

The Philips Ledinaire surface-mounted (SM065C) range features a selection of popular off-the-shelf LED luminaires that offer Philips high quality at a competitive price. Reliable, energy-efficient and affordable, this latest generation of 600 x 600 mm Ledinaire LED surface-mounted lights are designed for diffuse, comfortable lighting in a wide range of general lighting applications—just what you need.

Benefits

- No risks, trusted performance
- Good quality, easy to use
- No confusion, easy product selection

Applications

- Offices
- Education
- Healthcare

Features

- Surface-mounted versions
- Modern, unobtrusive design
- Energy efficient up to 120 lm/W
- Long lifetime of 75,000 hours @L70 and 50,000 hours @L80
- Office compliant (OC) and non-office compliant (NOC) versions available

Versions

Ledinaire surface mounted
SM065C RTP

Dimensional drawing

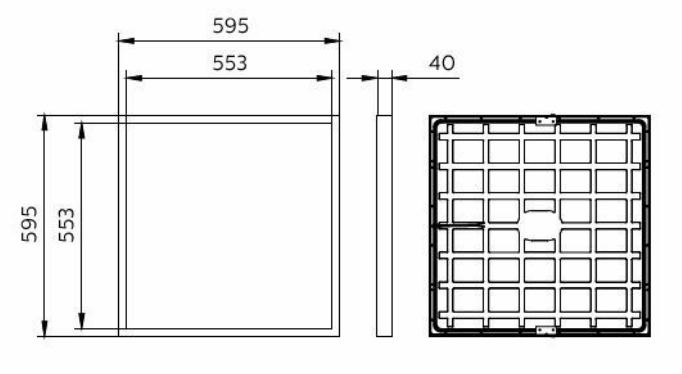

SM065C 41S/840 PSU W60L60 OC 4PK

Product details



Ledinaire surface mounted
SM065C back side DPP

Ledinaire-surface-mounted-
SM065C-W60-L60-DPP

General Information

Number of gear units	1 unit
Driver included	Yes
Service tag	No

Light Technical

Luminous Flux	4,100 lm
Correlated Color Temperature (Nom)	4000 K
Luminous Efficacy (rated) (Nom)	120 lm/W
Color rendering index (CRI)	>80

Operating and Electrical

Input Voltage	220 to 240 V
Line Frequency	50 or 60 Hz
Power Consumption	34 W
Suitable for random switching	Yes
Protection class IEC	Safety class II

Controls and Dimming

Dimmable	No
Maximum dim level	Not applicable

Mechanical and Housing

Housing Color	White
Ingress protection code	IP20/40 [Finger-protected;Wire-protected]
Mech. impact protection code	IK02 [0.2 J standard]

Emergency Operation

Central Emergency	No

Approval and Application

Glow-wire test	Temperature 650 °C, duration 30 s
Flammability mark	For mounting on normally flammable surfaces
CE mark	Yes
ENEC mark	-
Flickering value (PstLM) - Flickering value as per EN 61000-3-3	1
Ambient temperature range	-10 to +35 °C

Initial Performance (IEC Compliant)

Luminous flux tolerance	-10% / +10%
Initial chromaticity	(0.38, 0.38) SDCM ≤5

Light Technical

Order Code	Full Product Name	Beam angle of light source	Optic type
911401892085	SM065C 41S/840 PSU W60L60 OC	90 degree(s)	Beam angle 90°
911401892185	SM065C 41S/840 PSU W60L60 NOC	120 degree(s)	Beam angle 120°
911401892285	SM065C 41S/840 PSU W60L60 OC 4PK	90 degree(s)	Beam angle 90°
911401892385	SM065C 41S/840 PSU W60L60 NOC 4PK	120 degree(s)	Beam angle 120°

© 2026 Signify Holding. All rights reserved. The information provided herein is subject to change, without notice. Signify does not give any representation or warranty as to the accuracy or completeness of the information included herein and shall not be liable for any action in reliance thereon. The information presented in this document is not intended as any commercial offer and does not form part of any quotation or contract, unless otherwise agreed by Signify. Philips and the Philips Shield Emblem are registered trademarks of Koninklijke Philips N.V.