PHILIPS

Halogen Low Voltage

XHDIDI



Halogen Low Voltage – long life, low costs

The long lifetime of most of the Halogen Low Voltage lamps is further extended by the unique P3 technology developed by Philips. This allows the lamp to be used at higher temperatures, thereby extending the lamp's lifetime, reducing early failures, and resulting in fewer maintenance man hour costs. P3 also ensures consistency of high-quality light output, and allows the lamp to be used in any burning position, which enables more compact fixture designs. In addition, the compact filament produces a clean white light and high beam intensity for true natural colors on stage and without any hotspots.

Benefits

- Lower lamp replacement costs
- High beam intensity
- Pure colors on stage
- Allows creative use without hotspots or shadows

Applications

- These lamps are especially suitable for disco, moving beam, luminaires

Features

- Lifetime up to 1000 hours due to Philips Pinch Protection
- Compact filament

Data subject to change

- White light
- Even light distribution

Versions



XPPR XHOPDI 0002

Dimensional drawing

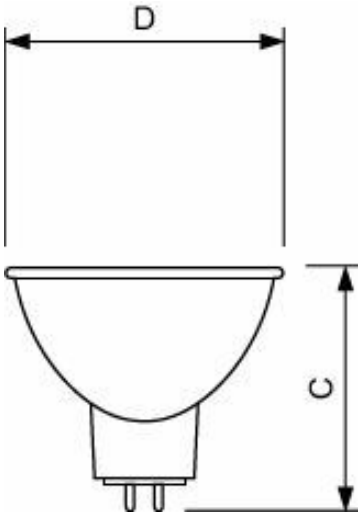

Product	D (max)	C (max)
13163 ELC/5H 250W GX5.3 24V 1CT/24	50 mm	44.5 mm
13164 200W GX5.3 24V 1CT/24	50.7 mm	44.5 mm
ELC/10H 250W GX5.3 24V 1CT/24	50 mm	44.5 mm

General Information

Cap-Base	GX5.3

Light Technical

Color rendering index (CRI)	100

Controls and Dimming

Dimmable	Yes

Mechanical and Housing

Bulb Material	Quartz-UV Open
Bulb Shape	R50

General Information

Order Code	Full Product Name	Operating Position
923921120594	13164 200W GX5.3 24V 1CT/24	S90
924862720540	13163 ELC/5H 250W GX5.3 24V 1CT/24	S90
924913220540	ELC/10H 250W GX5.3 24V 1CT/24	UNIVERSAL

Operating and Electrical

Order Code	Full Product Name	Power Consumption
923921120594	13164 200W GX5.3 24V 1CT/24	200 W
924862720540	13163 ELC/5H 250W GX5.3 24V 1CT/24	250 W
924913220540	ELC/10H 250W GX5.3 24V 1CT/24	250 W

© 2026 Signify Holding. All rights reserved. The information provided herein is subject to change, without notice. Signify does not give any representation or warranty as to the accuracy or completeness of the information included herein and shall not be liable for any action in reliance thereon. The information presented in this document is not intended as any commercial offer and does not form part of any quotation or contract, unless otherwise agreed by Signify. Philips and the Philips Shield Emblem are registered trademarks of Koninklijke Philips N.V.