PHILIPS

BRP121

BRP121



Safe & reliable

This Philips pathway is a high endurance and low maintenance product which has high specs to fit common prof applications. It's a reliable product with peace of mind.

Benefits

- Robust design: complies relevant safety and performance standard.
- Energy savings: 140lm/w efficacy ensures substantial energy saving vs conventional streetlight.
- Unique look & feel: one large piece of die-cast aluminum housing with diffused cover less glare.

Applications

- Amenity/Security/Landscape/ Plaza square/Parking/ Architectural lighting

Features

- 3 CCT: 3000K/4000K/6500K
- Full range: 30/50/70/80/100w
- High efficacy: 140lm/w
- IP65 / IK08
- Vertical & Horizontal pole with same pole mount
- Lifetime: 30Khrs@Ta35
- Compliances: CQC/CB/EMC

Versions



Essential Smartbright Pathway gen2



Essential Smartbright Pathway gen2



Essential Smartbright Pathway gen2



Essential Smartbright Pathway gen2



Essential Smartbright Pathway gen2



Essential Smartbright Pathway gen2

Dimensional drawing

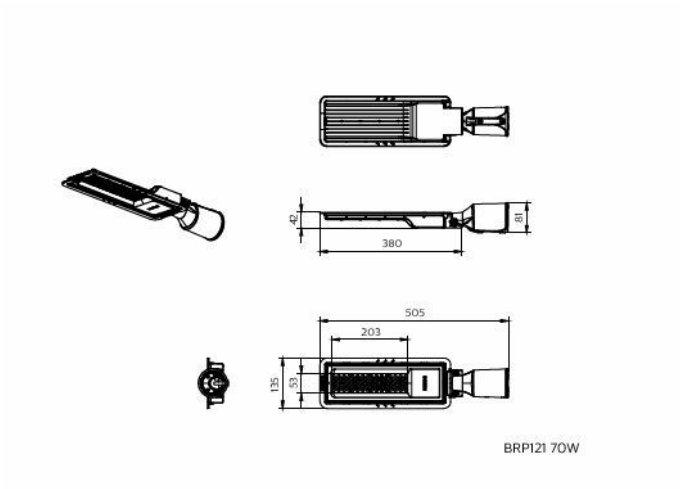

BRP121 G2 LED98/NW 70W 220-240V GM

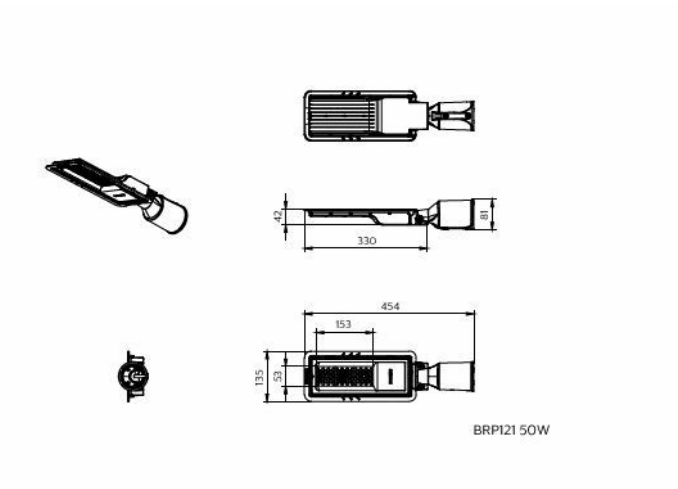

BRP121 G2 LED70/NW 50W 220-240V

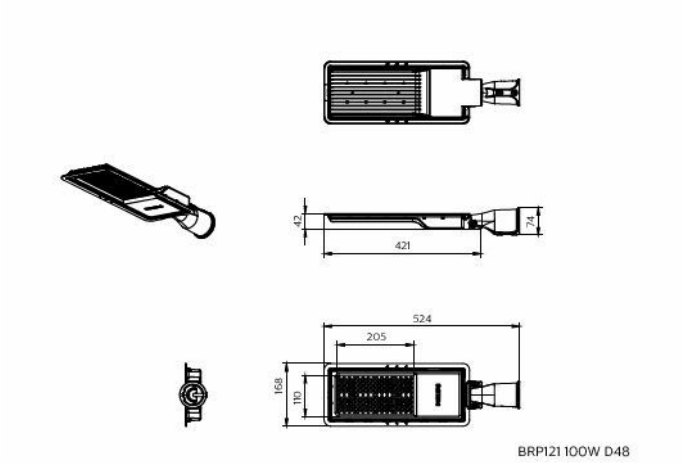

BRP121 G2 LED140/CW 100W 220-240V D48 GM

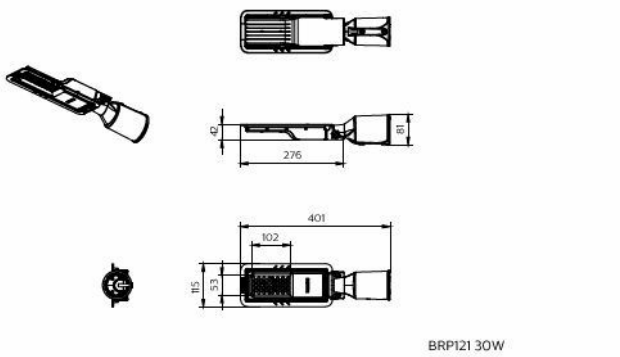

BRP121 G2 LED45/CW 30W 220-240V

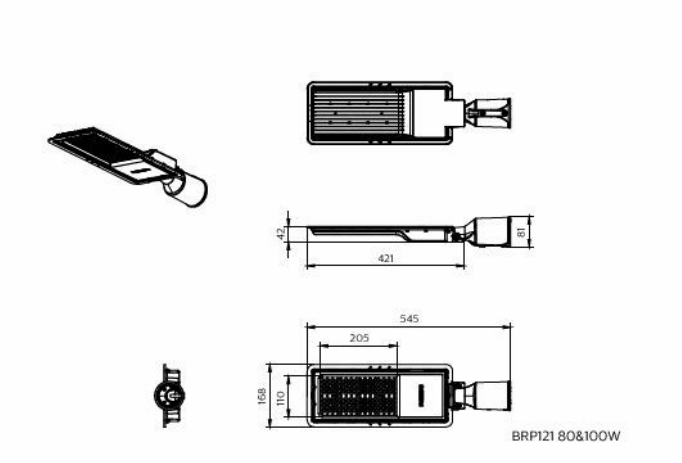

BRP121 G2 LED140/NW 100W 220-240V

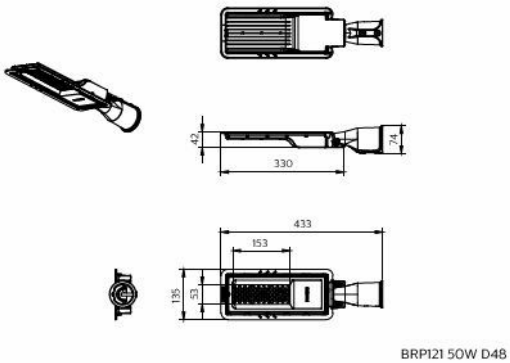

BRP121 G2 LED70/CW 50W 220-240V D48 GM

Product details



Essential Smartbright Pathway gen2

General Information

Number of gear units	1 unit
Gear	EB [Electronic]
Driver included	Yes

Light Technical

Color rendering index (CRI)	≥70
Number of light sources	1

Controls and Dimming

Dimmable	-
Maximum dim level	Not applicable

Mechanical and Housing

Housing Color	Grey
Ingress protection code	IP65 [Dust penetration-protected, jet-proof]
Mech. impact protection code	IK08 [5 J vandal-protected]
Optical cover type	Lens

Approval and Application

Glow-wire test	Temperature 650 °C, duration 30 s
Flammability mark	-
CE mark	No

Light Technical

Order Code	Full Product Name	Luminous Flux	Correlated Color Temperature (Nom)	Light source color
911401865887	BRP121 G2 LED108/WW 80W 220-240V	10,800 lm	3000 K	730 warm white
911401865987	BRP121 G2 LED112/NW 80W 220-240V	11,200 lm	4000 K	740 neutral white
911401866087	BRP121 G2 LED120/CW 80W 220-240V	11,200 lm	6500 K	765 cool daylight
911401867287	BRP121 G2 LED108/WW 80W 220-240V GM	10,800 lm	3000 K	730 warm white
911401867387	BRP121 G2 LED112/NW 80W 220-240V GM	11,200 lm	4000 K	740 neutral white
911401867487	BRP121 G2 LED112/CW 80W 220-240V GM	11,200 lm	6500 K	765 cool daylight
911401866187	BRP121 G2 LED135/WW 100W 220-240V	13,500 lm	3000 K	730 warm white
911401866287	BRP121 G2 LED140/NW 100W 220-240V	14,000 lm	4000 K	740 neutral white
911401866387	BRP121 G2 LED150/CW 100W 220-240V	14,000 lm	6500 K	765 cool daylight
911401867587	BRP121 G2 LED140/CW 100W 220-240V GM	14,000 lm	6500 K	765 cool daylight
911401865587	BRP121 G2 LED95/WW 70W 220-240V	9,450 lm	3000 K	730 warm white
911401865687	BRP121 G2 LED98/NW 70W 220-240V	9,800 lm	4000 K	740 neutral white
911401865787	BRP121 G2 LED105/CW 70W 220-240V	9,800 lm	6500 K	765 cool daylight
911401867087	BRP121 G2 LED98/NW 70W 220-240V GM	9,450 lm	4000 K	740 neutral white
911401867187	BRP121 G2 LED98/CW 70W 220-240V GM	9,800 lm	6500 K	765 cool daylight
911401867687	BRP121 G2 LED70/CW 50W 220-240V D48 GM	7,000 lm	6500 K	765 cool daylight
911401867787	BRP121 G2 LED140/CW 100W 220-240V D48 GM	14,000 lm	6500 K	765 cool daylight

Order Code	Full Product Name	Luminous Flux	Correlated Color Temperature (Nom)	Light source color
911401865287	BRP121 G2 LED68/WW 50W 220-240V	6,750 lm	3000 K	730 warm white
911401865387	BRP121 G2 LED70/NW 50W 220-240V	7,000 lm	4000 K	740 neutral white
911401865487	BRP121 G2 LED75/CW 50W 220-240V	7,000 lm	6500 K	765 cool daylight
911401866787	BRP121 G2 LED68/WW 50W 220-240V GM	6,750 lm	3000 K	730 warm white
911401866887	BRP121 G2 LED70/NW 50W 220-240V GM	7,000 lm	4000 K	740 neutral white
911401866987	BRP121 G2 LED70/CW 50W 220-240V GM	7,000 lm	6500 K	765 cool daylight
911401864987	BRP121 G2 LED40/WW 30W 220-240V	4,050 lm	3000 K	730 warm white
911401865087	BRP121 G2 LED42/NW 30W 220-240V	4,200 lm	4000 K	740 neutral white
911401865187	BRP121 G2 LED45/CW 30W 220-240V	4,200 lm	6500 K	765 cool daylight
911401866487	BRP121 G2 LED40/WW 30W 220-240V GM	4,050 lm	3000 K	730 warm white
911401866587	BRP121 G2 LED42/NW 30W 220-240V GM	4,050 lm	4000 K	740 neutral white
911401866687	BRP121 G2 LED42/CW 30W 220-240V GM	4,200 lm	6500 K	765 cool daylight

Operating and Electrical

Order Code	Full Product Name	Power Consumption
911401865887	BRP121 G2 LED108/WW 80W 220-240V	80 W
911401865987	BRP121 G2 LED112/NW 80W 220-240V	80 W
911401866087	BRP121 G2 LED120/CW 80W 220-240V	80 W
911401867287	BRP121 G2 LED108/WW 80W 220-240V GM	80 W
911401867387	BRP121 G2 LED112/NW 80W 220-240V GM	80 W
911401867487	BRP121 G2 LED112/CW 80W 220-240V GM	80 W
911401866187	BRP121 G2 LED135/WW 100W 220-240V	100 W
911401866287	BRP121 G2 LED140/NW 100W 220-240V	100 W
911401866387	BRP121 G2 LED150/CW 100W 220-240V	100 W
911401867587	BRP121 G2 LED140/CW 100W 220-240V GM	100 W
911401865587	BRP121 G2 LED95/WW 70W 220-240V	70 W
911401865687	BRP121 G2 LED98/NW 70W 220-240V	70 W
911401865787	BRP121 G2 LED105/CW 70W 220-240V	70 W
911401867087	BRP121 G2 LED98/NW 70W 220-240V GM	70 W
911401867187	BRP121 G2 LED98/CW 70W 220-240V GM	70 W
911401867687	BRP121 G2 LED70/CW 50W 220-240V D48 GM	50 W
911401867787	BRP121 G2 LED140/CW 100W 220-240V D48 GM	100 W
911401865287	BRP121 G2 LED68/WW 50W 220-240V	50 W
911401865387	BRP121 G2 LED70/NW 50W 220-240V	50 W
911401865487	BRP121 G2 LED75/CW 50W 220-240V	50 W
911401866787	BRP121 G2 LED68/WW 50W 220-240V GM	50 W
911401866887	BRP121 G2 LED70/NW 50W 220-240V GM	50 W
911401866987	BRP121 G2 LED70/CW 50W 220-240V GM	50 W
911401864987	BRP121 G2 LED40/WW 30W 220-240V	30 W
911401865087	BRP121 G2 LED42/NW 30W 220-240V	30 W
911401865187	BRP121 G2 LED45/CW 30W 220-240V	30 W
911401866487	BRP121 G2 LED40/WW 30W 220-240V GM	30 W

Order Code	Full Product Name	Power Consumption
911401866587	BRP121 G2 LED42/NW 30W 220-240V GM	30 W
911401866687	BRP121 G2 LED42/CW 30W 220-240V GM	30 W

© 2026 Signify Holding. All rights reserved. The information provided herein is subject to change, without notice. Signify does not give any representation or warranty as to the accuracy or completeness of the information included herein and shall not be liable for any action in reliance thereon. The information presented in this document is not intended as any commercial offer and does not form part of any quotation or contract, unless otherwise agreed by Signify. Philips and the Philips Shield Emblem are registered trademarks of Koninklijke Philips N.V.