PHILIPS

LED Systems

Linear & Area

Strip / Line / Square

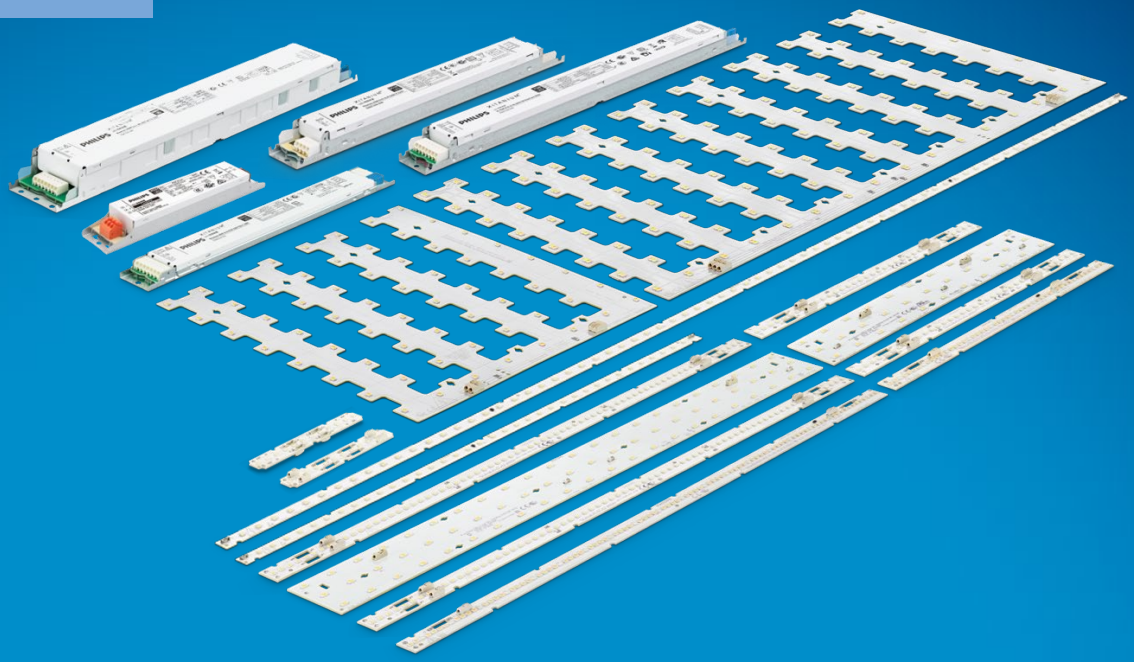

Design-in Guide

Perfect mix of design freedom and high energy efficiency

March 2022

Published versions
12 June 2013 - First version
27 June 2013
10 February 2014
27 March 2015
14 April 2015
20 May 2015
29 July 2015
2 August 2016
16 February 2017
11 May 2017
6 September 2017
24 May 2019
18 September 2019
28 September 2021
31 March 2022
.....

Contents

Introduction to this guide 5
Product information documents 5

Warnings and instructions for HV products 6
When using a non-isolated driver, intended for High Voltage (HV) products 6

Warnings and instructions for LV products 8
When using an isolated driver, intended for Low Voltage (LV) products 8

Introduction to Philips LED Systems 9
Applications and luminaire classification 9
How to... Use LED Linear systems in outdoor luminaires 10
Commercial naming of the Philips LED Linear modules 10
Cautions during storage and transportation 10
Zhaga 11
How to... Come to your typical LED Linear system 12
How to... Convert to your preferred LED Linear solution 13

Electrical design-in 14
Reasons why to set your drive current 14
Philips Indoor Linear LED drivers 14
Xitanium driver operating window 15
Insulation safety indicated by working voltage 16
How to... Select an appropriate driver 16
How to... Configure an LV system 17
How to... Configure a HV system 18
LED Line 1 ft SQ and LED Square 2500 lm module – HV/LV Hybrid 20
How to... Mix different models of LED modules 20
Two-channel systems like FlexTune and BioUp 22
How to... Use different LED module generations 25
Whole lumen range covered with 3 building blocks 25
How to... Tune the luminaire's flux and efficacy 25
How to... Set the output current via Rset 26
How to... Configure your driver with Philips MultiOne 30
How to... Wire - general remarks 30
Automatic wiring by robot 30
Electromagnetic compatibility (EMC) 31
How to... Improve EMI performance 32

Mechanical design-in 33
Mechanical fixation and creepage for LED Linear modules 33
How to... Define cut-out for modules with a back-side connector 33
Alternative fixation methods 34
0.25ft modules 35

Optical design-in 36
Optics on top of, or near the LED Linear modules 36
www.philips.com/oem. 38
Reflector design 38
Required minimum clearance distance 38

Thermal design-in 39
Introduction 39
Thermal behaviour of indoor linear LED drivers 39
Tc point 39
How to... Measure Tc at the Tc point 40
How to... Tune for anticipated ambient temperature (°C) 40
Influence of thermal resitance of the luminaire 41
How to... Calculate Tc after changing the drive current 42

Cooling via the luminaire housing or cooling plate Thermal contact 43
Thermal radiation and emissivity coefficient 43
Tips for small volume and double chamber conditions 44
How to... Design for good thermal performance 44

Reliability 45
Impact of thermal cycling on product failure 45
Lumen maintenance of the Philips LED Linear modules 45
Fuse on Linear LED modules 46
SiDAC 47

Human Centric Lighting solutions 48
FlexTune 48
Cyan Enhanced Spectra 48

Tips for assembly and installation 49
Inserting and removing the cables 49
Binning 49
ElectroStatic Discharge (ESD) 50
How to... Meet the ESD requirement 50
Servicing and installing luminaires 50

Controllability 51
Dimming 51
Connected Lighting Systems - MC 51

Quality, compliance, and approval 52
Energy efficiency labelling 52
Chemical compatibility 52
Compliance and approval marks 53
Ingress Protection – IP rating, humidity, and condensation 53
Photobiological safety 53
Blue Light Hazard 54
System disposal 54
Relevant Standards 55

Contact details and suggested suppliers 56
Philips LED Linear systems 56
ESD-related material and tool suppliers 56

Appendix 57
Appendix A 57
Appendix B: Example wiring schematics 58

Disclaimer 59

Introduction to this guide



Philips LED Linear system building blocks

Thank you for choosing the Philips LED Linear system. In this guide you will find the information you need to design this system into a luminaire.
This edition covers the complete Philips LED Linear family released for Europe, including all Low Voltage (LV) and High Voltage (HV) versions of Fortimo LED Strip, LED Line, and LED Square families.

Extensions to the range will be included in future updates of this guide. We advise you to consult our website for the latest up-to-date information. For a full portfolio overview please consult the Commercial Leaflets, to be found in the download section on:
www.philips.com/oem

Note: LED technology is continuously improving. For the latest updated information, please check:
www.philips.com/oem

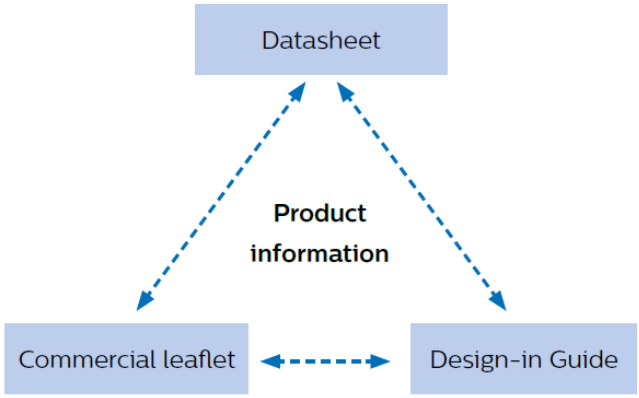

Product information documents

In order to provide information in the best possible and consistent way, Philips' philosophy on product documentation is the following.

- Commercial leaflet:
  product family overview & system combinations.
- Datasheet:
  product specific specification.
- Design-In Guide:
  describes how to design-in the products into a system.

These documents can be found in the download section on the OEM website:
www.philips.com/oem

If you need any further information or support, please, consult your local Philips office.

Note that this triangle of information is also available for the drivers separately.

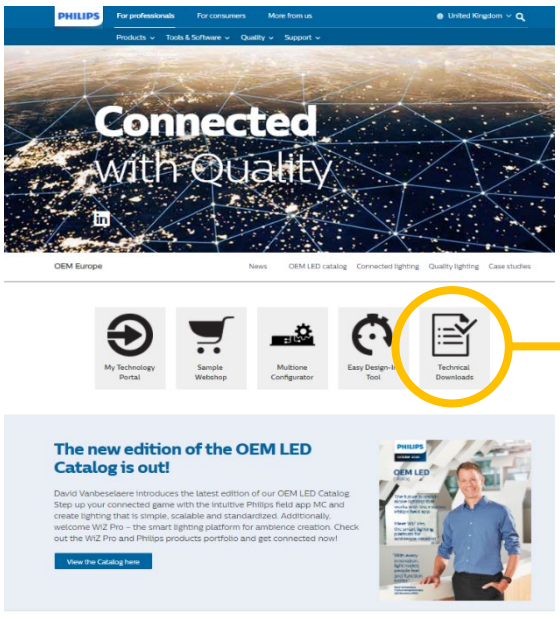

Download section of the OEM Website

Warnings and instructions for HV products

When using a non-isolated driver, intended for High Voltage (HV) products

Warning:

- Avoid touching live parts!
- Avoid touching any bare components on the PCB, e.g. LEDs!
- Do not use damaged LED modules!
- Class I luminaires must be connected to protective earth!
- Do not reverse the polarity when connecting a module!

Safety warnings and installation instructions

To be taken into account during design-in and manufacturing.

Design-in phase



- The general IEC recommendations for luminaire design and legal safety regulations (ENEC, CE, ANSI, etc.) are also applicable to Philips LED Linear systems. Luminaire manufacturers are advised to conform to the international standards for luminaire design (Class I, IEC 60598-Luminaires).
- Class I luminaires must provide a protective earth!
- The luminaire must be constructed in such a way that the LED module cannot be touched by an end-user, both in off state and when live.
- It is mandatory to design the luminaire in such a way that it can only be opened with special tools (by a qualified person) in order to prevent touching of live parts.
- Do not install a reflector near the LED module without a proper earth connection.
- Do take into account the minimum required creepage and clearance distances.
- Do not apply mains power to the LED module directly.
- Connect all electrical components first before switching on mains.
- The LED module shall be powered by a LED controlgear IEC/EN 61347-2-13 certified.
- Avoid possibilities of water or dirt ingress: use appropriate IP-rating of luminaire with regard to specific conditions of application.

Remark

Next to providing sufficient creepage and clearance, preventions should be taken to make sure interruptions or short circuits in the electrical circuit do not occur and if so, the system can handle it. In extreme situations this can be caused by e.g. broken or damaged LED's, water ingress, loose wire connections or dust and dirt contacting the surface of the LED module and creating a conductive path. In the fixture design precautions should be taken to avoid this as much as possible. Most and newest Philips Xitanium drivers provide a special function called "Output Over Voltage Detection" (OOVD) which monitors the voltage of the LED module. In case of unexpected changes or sudden increase of voltage, the driver shuts down automatically. Therefore, for maximum reliability and safety it is recommended to use your Fortimo LED module in combination with a driver providing OOVD.

Manufacturing phase

- Do not use damaged or defective LED modules, including damaged connectors or PCB.
- Do not drop the LED module or let any object fall onto the LED module because this may damage the PCB or LEDs. If the LED module has been dropped or an object has fallen onto the LED module, do not use it, even if there are no visible defects or signs of damage.
- Connect all electrical components first before switching on mains.
- Especially modules with a SiDac are very sensitive to wrong polarity connection. Pay attention to this in order to prevent severe damage of the module.
- The LED module shall be powered by a LED control gear IEC/EN 61347–2–13 certified.

Installation and service for luminaires incorporating the Philips LED Linear system

- Do not service the luminaire when the mains voltage is connected; this includes connecting or disconnecting the LED module cables.
- The installer must connect the luminaire, if incorporating the Philips LED Linear system, to protective earth!
- Do not use damaged products.

In order to prevent damage to the LEDs on the LED module, we strongly recommend to use the insulation resistance measurement at 500VDC (noted as alternative test in IEC/EN 60598-1, annex Q) rather than performing an AC electrical strength test on the luminaire as the latter might damage the LEDs.

Philips Design-in support

Is available; please contact your Philips sales representative.

Warnings and instructions for LV products

When using an isolated driver, intended for Low Voltage (LV) products

Warning:

- Avoid touching live parts!
- Avoid touching any bare components on the PCB, e.g. LEDs!
- Do not use damaged LED modules!

Safety warnings and installation instructions

To be taken into account during design-in and manufacturing.

Design-in phase



- It is mandatory to use a UL class 2 / IEC compliant SELV driver in combination with the LED Linear LV products.
- The general IEC and UL recommendations for luminaire design and legal safety regulations (ENEC, CE, ANSI, etc.) are also applicable to Philips LED Linear systems. Luminaire manufacturers are advised to conform to the international standards for luminaire design (e.g. UL1598, IEC 60598-Luminaires).
- It is advised to construct the luminaire in such a way that the LED module cannot be touched by an end-user, both in off state and when live.
- Consider the minimum required creepage and clearance distances.
- Do not apply mains power to the LED module directly.
- Connect all electrical components first before switching on mains.
- The LED module shall be powered by a LED controlgear IEC/EN 61347–2–13 certified.
- Avoid possibilities of water and dust ingress: use appropriate IP-rating of luminaire with regard to specific conditions of application.

Manufacturing phase

- Do not use damaged or defective LED modules, including damaged connectors or PCB.
- Do not drop the LED module or let any object fall onto the LED module because this may damage the PCB or LEDs and affect proper functioning of the product.
- Connect all electrical components first before switching on mains.
- The LED module shall be powered by a LED controlgear IEC/EN 61347–2–13 certified.

Installation and service for luminaires incorporating the Philips LED Linear system

- Do not service the luminaire when the mains voltage is connected; this includes connecting or disconnecting the LED module cables.
- Do not use damaged products.

For optimal reliability of the LED module we advise not to apply an AC electric strength test to the luminaire as this might damage the LEDs. It is recommended instead to apply an insulation resistance measurement at 500 VDC (noted as alternative test in IEC/EN 60598-1 annex Q).

Philips Design-in support

Is available; please contact your Philips sales representative.

Introduction to Philips LED Systems



Philips Fortimo LED Strip 650 & 1100 lm/ft



Philips Fortimo LED Strip High Flux 2000 lm/ft (2 ft)



Philips Fortimo LED Line 1R (1 ft)



Philips Fortimo LED Line 3R (1 ft)



Philips Fortimo LED Square 2500 lm



Philips CertaFlux LED Strip gen1 family



Philips CertaFlux LED Strip 12mm family - 1,2,4,5 ft

Applications and luminaire classification

The Philips LED Linear system is the replacement for linear fluorescent lamps in general lighting. The system features a high level of energy efficiency, which surpasses T5 systems, enabling the lowest total cost of ownership (TCO). It offers high-quality white light with excellent color rendering and color consistency. Quality that comes with a multiple year Philips system warranty.
The LED Linear system consists of a range of modules, the Fortimo LED Lines and Strips, and CertaFlux LED Strips on one hand, and the Xitanium and CertaDrive drivers on the other. An overview is presented in the Commercial Leaflet of the Linear modules and for the drivers in the download section on www.philips.com/oem.

Fortimo LED Linear comes in a HV version, with best efficiency at lowest price, and LV version, with ease of design-in. Both ranges feature a variety of different dimensions, lumen packages and color temperatures.
CertaFlux/CertaDrive systems come in a HV version only. In this guide you will find the specific information required to develop a luminaire based on Philips LED Linear system. Product specific data can be found in the associated datasheet on www.philips.com/oem.

Both the Philips Fortimo LED Linear HV system and CertaFlux system contain high-voltage solutions that comply with European Class I requirements for indoor lighting applications. Other applications or luminaires can be explored by OEMs as long as this does not create a design conflict. European luminaire standards, like IEC/EN 60598, must be complied with.

In this guide you will find the specific information required to develop a luminaire based on the Philips LED Linear system for both HV and LV products.



How to… Use LED Linear systems in outdoor luminaires

Neither the LED modules nor the indoor Linear LED driver have an IP classification >IP20. Furthermore for outdoor luminaires, compliance to a higher mains surge standard is required than the indoor standard LED module is tested against. Not complying with the outdoor standard will lead to damaged LEDs. If deciding to use these products in a luminaire for outdoor applications the OEM will be responsible for ensuring proper IP protection, adequate mains surge protection and approbation of the luminaire. Please consult Philips if you wish to deviate from the design rules described in this guide (see last page for contact details).

Commercial naming of the Philips LED Linear modules

The names of Philips LED Linear are defined as shown in underneath example. A similar approach holds true for CertaFlux, by replacing Fortimo by CertaFlux.

Fortimo LED Line 1 ft 650 lm 840 XX 3R HV2

Fortimo : our concept name for efficient, clear and reliable lighting
LED : the light source used
Line : linear module (Line, SQ or Strip)
1ft : length of LED module
650 lm : 650 lumen output
840 : 8 denotes a color rendering index of 80 (CRI divided by 10)
40 stands for a CCT of 4000 K (CCT divided by 100)
XX : this position is not always used and is meant for additional information, e.g HE for High Efficacy,
FC for Front Connector, BC for Back Connector, PW for Premium White
3R : indicates the number of LED rows on a LED Line, in this case 3
HV : High Voltage: indication of compliance with European class I requirements
2 : Generation 2

In this design-in guide

In this design-in guide you will find all necessary guidelines to configure the LED Linear system to your needs. The LED Linear range is designed to enable all types of luminaires in general lighting whether they were traditionally equipped with linear fluorescent tubes or are completely new designs.

Cautions during storage and transportation

When storing this product for a long time (more than one week)

- Store in a dark place. Do not expose to direct sunlight.
- For Philips LED Linear modules: do maintain
    - Temperature between -40..+85 °C
    - Relative Humidity (RH) 5..85 %.

During transportation and storage for a short time

Maintain temperature below 100 °C at normal, non-condensing relative humidity.

Zhaga

Many LED Linear modules are either Zhaga certified or compliant. Please check the associated datasheet of the LED module you are using for Zhaga details on www.philips.com/oem.
Zhaga is an international organization that is enabling the interchangeability of LED light sources made by different manufacturers. The interface specifications, for the products covered in this Design-In Guide designated in Book 7 can now be downloaded from the Zhaga website at
https://www.zhagastandard.org/books/overview.html

Book 7 covers a variety of rectangular and linear LED modules with different dimensions and with separate electronic control gear that are intended primarily for use in indoor lighting applications. Book 7 modules are typically mounted directly into a luminaire by means of screws.

Compose your luminaire with LED Linear



In this section you will find all of the product information needed to compose a configuration based on the Philips LED Linear system.

A LED Linear system typically consist of the following building blocks

- Philips LED Linear modules.
- Philips Indoor Linear LED Driver.
- Standard installation wire (solid core, not offered by Philips).
- Optionally a resistor to set the output current (not offered by Philips).
- Optionally MultiOne configurator software and hardware interface to program TD drivers (to be purchased separately from Philips).
- Optionally Philips controls, with functions like presence detection or light measuring to allow reduction of energy consumption. Controls can also contain a radio (Buetooth, ZigBee) enabling wireless communication.

How to... Come to your typical LED Linear system

With the following steps we like to provide you with a starting point for designing your Philips LED Linear luminaire, either coming from a conventional lighting solution or starting from scratch.

1. Identify your lumen or lumen per length (lm/ft) requirement.
2. Determine if you will design for Class I or Class II/SELV.
3. Select your preferred LED lay-out (how the LEDs are spread over the module) from available portfolio.
4. Select the module type best matching above requirements.
5. Determine the amount of modules to use in your system.
6. Determine the electrical specification of the defined system (Voltage [V], current [A], and power [W]).
7. Find your best matching driver (power window, controllability).
8. Set or program the drive current on the driver.

The upcoming sections will help you in more detail to understand how to come to the required answers on above steps.

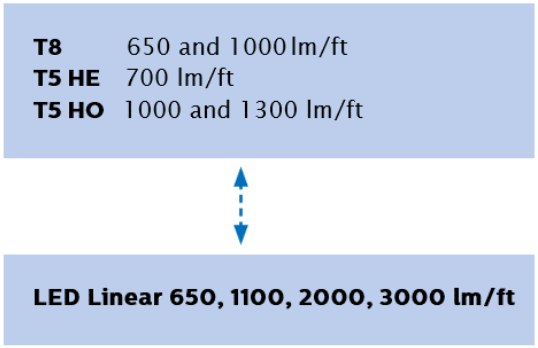

Relation between fluorescent lumen and LED Linear lumen

Why replacing fluorescent by smart LED building blocks

Instead of replacing hundreds of unique ballastfluorescent tube combinations, Philips has chosen to cover all applications with smart LED-building blocks.

These are the Philips LED Linear modules in combination with the Philips Window drivers – strong in flexibility.

Characteristics of these building blocks are

- Module lengths mimicking fluorescent lamps (0.5 ft, 1 ft, and 2ft).
- Driver dimensions mimicking conventional ballasts.
- Various LED lay-outs enabling glare and beam control.
- Lumen-ranges covering fluorescent lumen packages.

By analyzing the mainstream fluorescent lumen packages (amount of lumen per unit length [lm/ft]) three main values can be noted as can be seen in the table on the left; 650, 1100 and 2000 lm/ft. For reference please see table in Appendix A.
However, with the ability to select and set the drive current on the LED driver you are able to select your light output (lumen) different than the default. This degree of freedom and flexibility we call tuning and will be explained in a later section.

How to... Convert to your preferred LED Linear solution

This section is to help you find your preferred LED Linear system solution, starting from your familiar fluorescent system. Please find conversion examples in Appendix B, at the end of this document.

	Fluorescent light situation	LED Linear module consideration
1a	T5-HE / TL8	650 lm/ft
1b	T5-HO	1100 lm/ft
1c	PL-L	2000 lm/ft
2a	Open luminaire	LV system (ease of design-in)
2b	Closed luminaire	HV system (best TCO)
3a	Beam shaping	Narrow LED lay-out
3b	Glare & Luminance control	Wide LED lay-out

Conversion help from fluorescent situation to LED Linear system

Electrical design-in



In this section you will find all of the electrical design-in information needed to design your configuration based on the Philips LED Linear system.

Short introduction to operating LEDs

The LED is a semi-conductor device which, when an electrical current (Amperes) flows through it, emits light. The current cannot flow without a Voltage over the LED, called the forward Voltage (Vf). Forward Voltage (Vf) is the force to open the gate, allowing the current to flow through the LED. Drive current (Idrive) is transformed into light by the LED. The amount of light (luminous flux [lm]) is proportional to the amount of current.

Reasons why to set your drive current

With LED as a light source more flexibility in your luminaire design is enabled with respect to conventional light like fluorescent. We would like to explain to you why you would want to determine and set your drive current trough the LEDs.

Each LED module needs an electrical current to be able to emit light. In fact, the amount of light – flux [lm] – is proportional to the electrical current flowing through the LEDs.

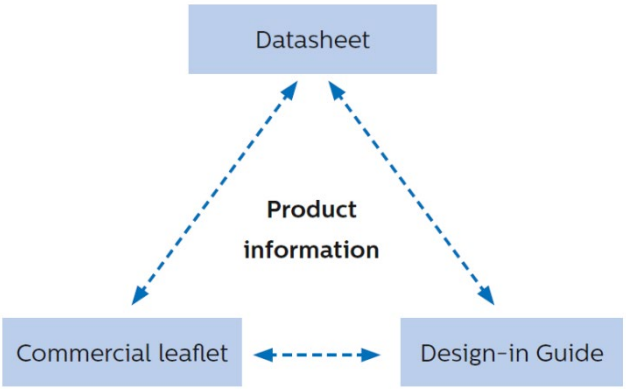

Philips Indoor Linear LED drivers

For the drivers, the same documentation philosophy holds as for the LED modules, meaning that also three documents make up the full information set of the drivers.

For detailed info, please refer to the Commercial Leaflet of the Indoor LED drivers, the Design-In Guide for Xitanium Indoor Linear LED drivers and the associated driver's datasheet on
https://www.lighting.philips.co.uk/oem-emea.

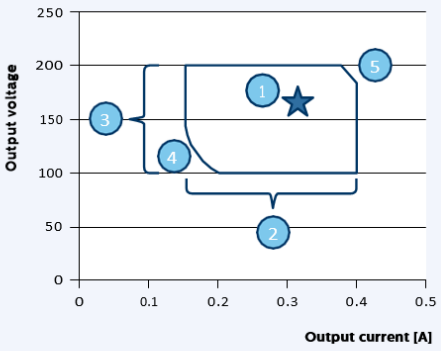

Example of a Driver Operating Window

1. Required set point for the LED solution.
2. Current can be set to needs within range.
3. Driver adapts to required voltage within range.
4. Driver minimum power limit to guard driver performance.
5. Driver maximum power limit to guard driver performance.

Note: Power (W) = Voltage (V) x Current (A).

Note: by means of dimming it is possible to go below the minimum value of the specified output current.

Xitanium driver operating window

LED technology is rapidly evolving. Using more efficient LEDs in a next generation means the same light output can be achieved with less power, hence lower drive currents. At the same time, LEDs can be driven at different current levels based on the application requirement. Typically, LED drivers are available in specific current ranges e.g. 80-350 mA, 150-500 mA or 200-700 mA. It can be necessary to replace a driver when more efficient LEDs or different LED modules become available and the required current does not fit in the current range of the driver anymore.

One of the key features of the Xitanium LED drivers is the adjustable output current (AOC), offering flexibility, differentiation for the OEM and future-proof luminaire design. The Xitanium drivers can operate in a so called “operating window”. This power window is defined by the maximum and minimum voltage (V), current (A) and power (W) that the driver can handle. An example of an operating window is shown on the left. The area indicates the possible current /voltage combinations. The current you select will depend on the type and manufacturer of the LEDs, the specific LED configuration of the PCB design and the desired output (lm) per LED.

The voltage required depends on the electrical layout of the PCB. Usually, the LEDs are connected in several strings. The Voltage needed is equal to the number of LEDs per string times the Vf of one LED. Within the driver window’s range, the driver will adapt to the Voltage requirement. Both the operating window and default current setting of every driver can be found in the datasheets in the download section on www.philips.com/oem.

Single channel driver

Several single current drivers have a double “+” and “-“ output, that these outputs are in parallel inside the driver allowing easy connection of parallel LED chains.

System configurations with LED Linear

As the default current of the drivers does not necessarily match your system drive current requirement, please be sure to set and check the current on the driver, e.g. by means of current measurement. When configuring the system with the Philips driver and Philips LED modules, the selected driver operating point needs to be within the driver operating window. In case of questions, contact your local Philips representative or the Philips Design-In Team.

Easy Design-In Tool (EDIT)

Instead of calculating the settings yourself, it is way easier to use our Easy Design-in Tool (EDIT). Just select the module you want to use, and the flux needed, and settings will be calculated automatically. Appropriate drivers are proposed as well. See: https://www.signify.com/global/support/tools/easy-design-in-tool

Power [W] = Voltage [V] x Current [A]

* **Note:** when connecting Philips LED modules to the driver, the type of LED module (**LV** or **HV**) determines this requirement. Hybrid LED modules (HV/LV in the name) can be used on both type of drivers, indicated in **Commercial Leaflet**, to be found in the download section of www.philips.com/oem.

** **Note:** Philips LED Linear standard system configurations, driven at nominal current, are stated in the **Commercial Leaflet**, to be found in the download section of www.philips.com/oem.

Setting the driver output current

CertaDrive LED drivers have a fixed output current, non-selectable. Xitanium drivers do have an operating window, allowing to select the output LED drive current. The output current of these drivers can be set in two ways.

1. By connecting a specific resistor value to the driver's Rset input.
2. TD driver versions can be programmed via the MultiOne interface to set the desired current: www.philips.com/multione
3. SimpleSet Verions can be programmed wireless with a MultiOne SimpleSet interface: www.philips.com/multione

For more information on programming these drivers please check the Design-In Guide of Xitanium Indoor Linear LED drivers in the download section on www.philips.com/oem.

How to determine what value the output current should be set at will be explained in the upcoming sections.

Insulation safety indicated by working voltage

The working voltage is the highest voltage that may occur across any insulation of the module without compromising the safety of the module. Any driver with an open load/ circuit voltage below the working voltage of the module can be safely used in combination with the module.

How to... Select an appropriate driver

Depending on your requirements several drivers can be found as a solution for you. The following steps can help selecting the preferred driver.

For a full overview of available driver models, please refer to the commercial leaflet Xitanium indoor linear LED drivers, to be found in the download section of www.philips.com/oem.
More detailed information can be found in the datasheets on the same website.

1. Determine your required drive current (Idrive) and voltage (Vf).
2. Calculate required power via: Pdrive (W) = Vf (V) x Idrive (A).
3. Determine which type* of driver you do need; Isolated (LV system, Class II/SELV) or Non-isolated (HV system, Class I).
   Collect the associated datasheets from the website.
4. Does required current fit current range of driver?: Idriver minimum ≤ Idrive ≤ Idriver maximum?
5. Does required voltage fit voltage range of driver?: Vdriver minimum ≤ Vf ≤ Vdriver maximum?
6. Does required power fit power range of driver?: Pdriver minimum ≤ Pdrive ≤ Pdriver maximum?
7. Choose your type** of dimming (TD/Dali, 1-10V or non-dimmable).

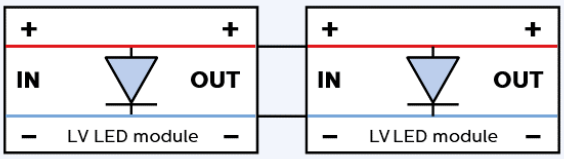

Schematic representation of the wiring of 2 connected LV LED modules in an LV system, not needing a Return-End cable

Idrive = Inom [A] x # modules

Required drive current **equals** nominal current of one LED module **times** number of LED modules.

Vdrive = Vf [V]

Required drive voltage **equals** forward voltage

Note:
The number of LED modules per chain does not have to be the same for all chains, since all LED modules are electrically connected in parallel.

Note:
For your convenience isolated drivers (LV system) comprise a duplicate – parallel – output, having 2x "+" and 2x "–" in parallel at the driver output. This means for the 2 chain lay-out the second chain can be connected either to the "+" and "–" of the first chain, or connected to the second set "+" and "–" of the driver.

Note:
LV products must not be terminated with a Return-End connection.

How to... Configure an LV system

LV systems typically use LV LED modules or Hybrid LED modules suitable for LV usage, connected to an isolated driver. LV products make a parallel system; adding a LED module requires a higher current.

1. Determine the operating current for the desired flux per LED module, using the datasheet. Make sure the operating current does not exceed the specified value for lifetime.
2. Drive current from the driver is the sum of the current required per LED module.
3. Check whether the resulting total current is within the driver's current range. If the current is too low, you can decide to select a driver with a lower output power. If the current is too high for the selected driver, a driver with a higher output power may provide a solution.
4. Connecting too many LV LED modules in a single chain may lead to flux imbalance. Check the advised maximum number of LED modules per chain in the associated LED module datasheet. If the number of LED modules in your system exceeds the specified maximum value it is advised to create a second chain.

Please find for the LED Linear product that you are using the wiring schematic at the end of each datasheet.
Datasheets can be downloaded in the product download section from
www.philips.com/oem.

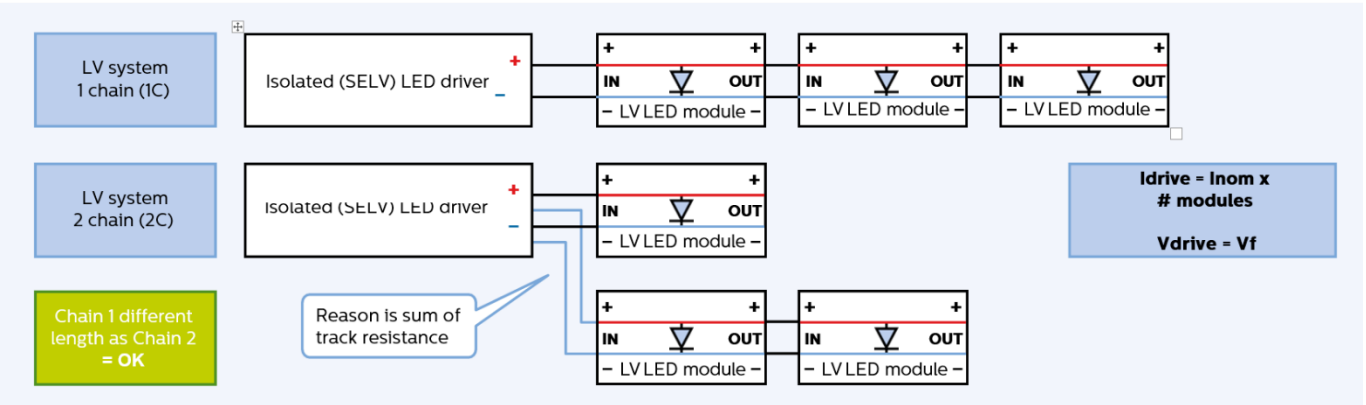

For your convenience isolated drivers (LV system) comprise a duplicate output, having 2x "+" and 2x "–" in parallel at the driver output. This means for the 2 chain lay-out the second chain can be connected either to the "+" and "–" of the first chain, or connected to the second set "+" and "–" of the driver.

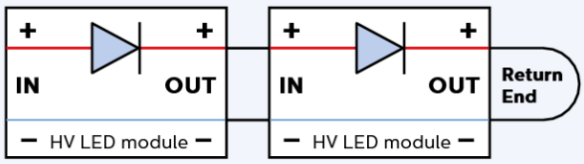

Schematic representation of the wiring of 2 connected HV LED modules, including the Return-End cable.

$I_{drive} = I_{nom}$ [mA] x #chains

Required drive current nominal current of one LED module.

$V_{drive} = V_f$ [V] x # modules per chain

Required drive voltage equals forward voltage of one LED module times number of LED modules.

Note:
For your convenience some non- isolated drivers (HV system) will comprise a duplicate output, having 2x "+" and 2x "-" in parallel at the driver output. This means for the 2 chain lay-out the second chain can be connected either to the "+" and "-" of the first chain, or connected to the second set "+" and "-" of the driver.

How to... Configure a HV system

HV systems typically use HV LED modules or Hybrid LED modules suitable for HV usage, connected to a non- isolated driver. HV products make a series system; adding a LED module requires a higher voltage.

1. Determine the operating current for the desired flux per LED module, using the datasheet. Make sure the operating current does not exceed the specified value for lifetime.
2. Check whether the operating current is within the driver's current range. If the current is too low, you can explore to connect two chains of LED modules in parallel; this requires a doubling of the driver current.

Note:
each chain requires an equal amount of LED modules.

3. Check the total operating voltage needed. This is done by multiplying the number of LED modules per chain and the nominal LED module voltage. If the resulting voltage is too low for the selected driver, you can choose a driver with a lower output power. If the voltage is too high for the selected driver, a driver with a higher output power may provide a solution.

The non-isolated driver window allows in several cases to explore the use of chains put in parallel. Note however these chains need to be of equal length (electrical load).

Please find for the LED Linear product that you are using the wiring schematic at the end of each datasheet.
Datasheets can be downloaded in the product download section from
www.philips.com/oem.

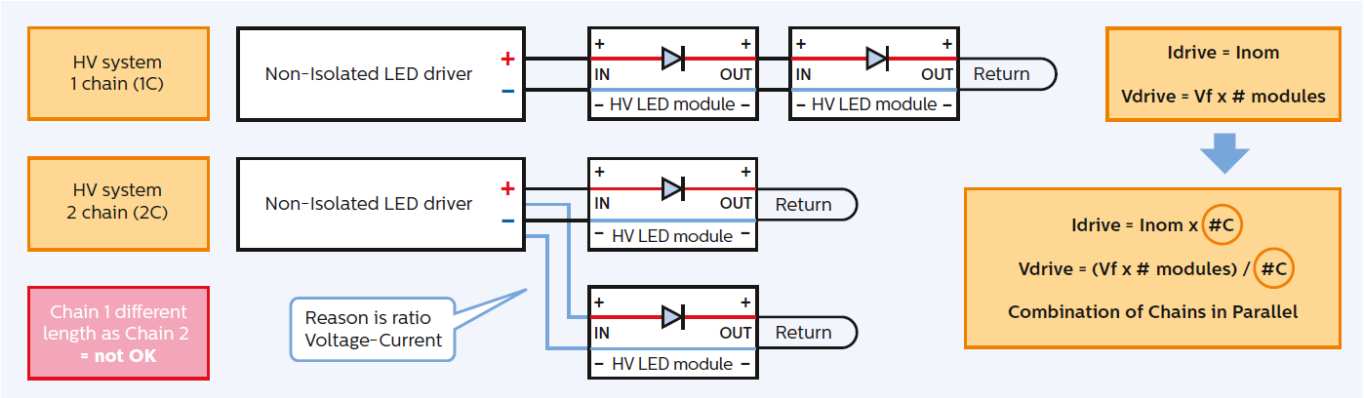

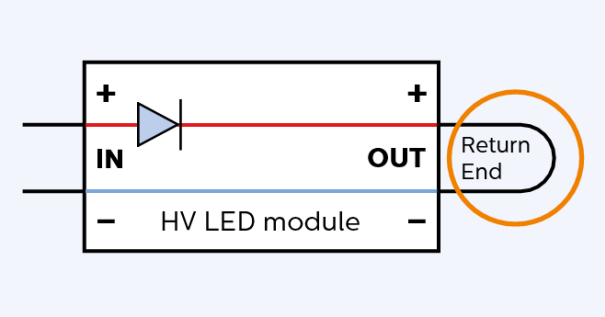

Schematic representation of the Return-End cable mounted on a double pole connector.

Return-end connection (HV product only)

The electric circuit of a LED Linear HV product with double pole connectors (“+” and “–“) on both IN and OUT is designed in such a way that multiple LED modules can be connected in series. This requires the ‘OUT’ connector of the last LED module to be short-circuited using a returnend connection. In case a multiple-chain lay-out is used, every chain has to be terminated with a return-end connection. HV LED modules with only single pole connectors do not use the return-end loop. In that situation, a return wire has to be connected between
the last board and the driver.

Alternative for Return-end connection (HV product only)

As the return path via the modules is consisting of a conducting track only, one could consider the alternative wiring as depicted below. This connection is equal to HV LED modules with only single pole connectors.

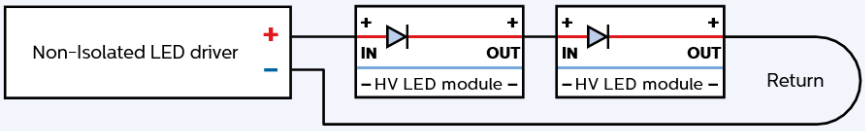

Schematic representation of a LED module with double pole connectors, single wired.

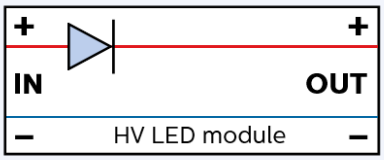

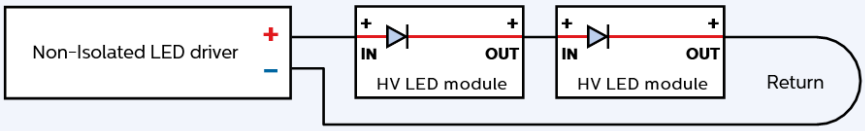

Schematic representation of a LED module with single pole

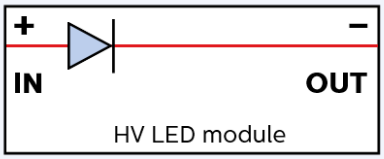

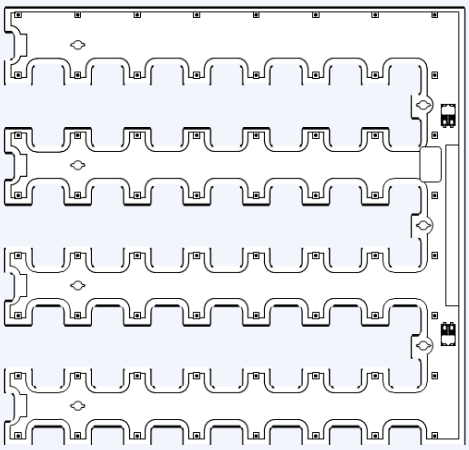

LED Square 1250lm module

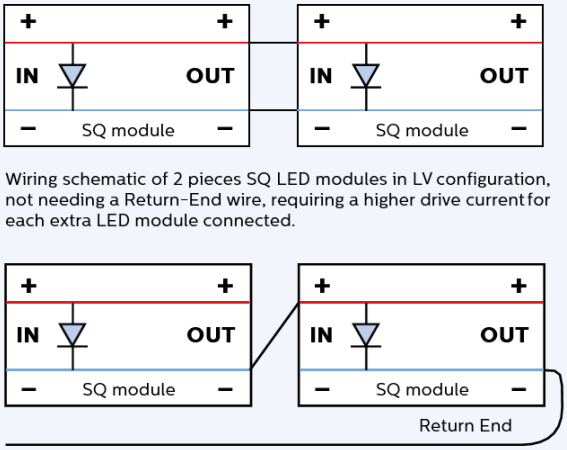

Wiring schematic of 2 pieces SQ LED modules in LV configuration, not needing a Return-End wire, requiring a higher drive current for each extra LED module connected.

Wiring schematic of 2 pieces SQ LED modules in HV configuration, needing a Return-End wire, requiring a higher forward voltage for each extra LED module connected.

Examples of LED modules that can be mixed

LED Line
1R 1100 lm/ft LV (1 ft with 2 ft), or
1R 1100 lm/ft HV (1 ft with 2 ft), or 1R
2000 lm/ft HV (1 ft with 2 ft), or

LED Strip
102 mm with 1 ft LV or
1R 1100 lm/ft LV (1 ft with 2 ft), or 1R
1100 lm/ft HV (1 ft with 2 ft)

LED Line 1 ft SQ and LED Square 2500 lm module – HV/LV Hybrid

HV or LV design rules for the LED Square HV/LV module?

When connected to a non-isolated driver the electrical design rules for HV products are applicable. On the other hand, when connected to an isolated driver the electrical design rules for LV products are applicable.

Wiring hybrid modules

The LED LED Square HV/LV modules are – as indicated – hybrid modules, meaning this module can be part of either an LV or HV system. However, the electrical design of the LED module resembles the LV approach. This implies that if both plus and minus are connected to a next hybrid module, this second module is in parallel to the first one. Also no Return End cable has to be installed.

Please find for the LED Square 2500 lm product that you are using the wiring schematic at the end of the datasheet. Datasheets can be downloaded from:
www.philips.com/oem.

Example of wiring LED Square modules

In a 600x600 application, 4 pieces of LED Square 1250lm SQ modules can be combined as a quadrant.
These modules can be operated on either a Xitanium 36 W or a 75 W driver. The 4 modules then have to be connected according to the wiring schemes in Appendix B, which is different for the 36 W, 75 W, non-isolated or isolated driver. When connected to:

- 75 W non-isolated driver, all 1 ft SQ modules have to be connected in series.
- 36 W non-isolated driver, 2 1 ft SQ modules have to be put in series (chain of 2 1 ft SQ modules) the two chains have to be connected in parallel to the driver.
- 36 W isolated driver, all 4 1 ft SQ modules need electrically to be in parallel.

How to determine the required current is explained in previous paragraphs and depends on both the amount of modules and the HV or LV approach.

For wiring example please see Appendix B at the end of this document.

How to... Mix different models of LED modules

Please note that although LED modules of different models can be connected to one another, only modules of the same type (lm/ft & xR & HV/LV) but different length can be mixed. These combinations are also indicated in the Commercial Leaflet (https://www.lighting.philips.co.uk/ oem-emea.) and are considered a released Philips LED Linear system. An example below to cover 5 ft length with
1 ft 1100 lm 1R HV and 2 ft 2200 lm 1R HV.

However, as indicated above mixing HV and LV type is not allowed because by having a different electrical design the safety requirements cannot be met. Another reason is that the voltage and current requirements differ per type and mixing them can lead to undesired performance differences. If you wish to deviate by mixing other types, please consult you Philips representative.

What value does the drive current need to be then?

Building a chain of LED modules leads to a certain value for the drive current, as explained in the previous section on how to configure a LED system. Building such a chain from different suitable modules does not always lead to a change of that current. To illustrate this please follow the next two examples:

1. HV: the current runs through all modules in the chain, meaning you only need to determine the current through one module, regardless the module's length.
2. LV: as each module has a requirement for the current linked to the amount of LEDs (2 ft has twice the amount of LEDs as the 1 ft) you simply sum up the currents required per LED module, meaning in the drawing below.
   - 5x current for 1 ft, equals.
   - 1x current for 1 ft + 2x current for 2 ft, equals.
   - 3x current for 1 ft + 1x current for 2 ft.

Note:
it is strongly advised to use all LED modules from the same bin to prevent flux imbalance. More on binning, see 'Binning' in section 'Tips for assembly and installation'.

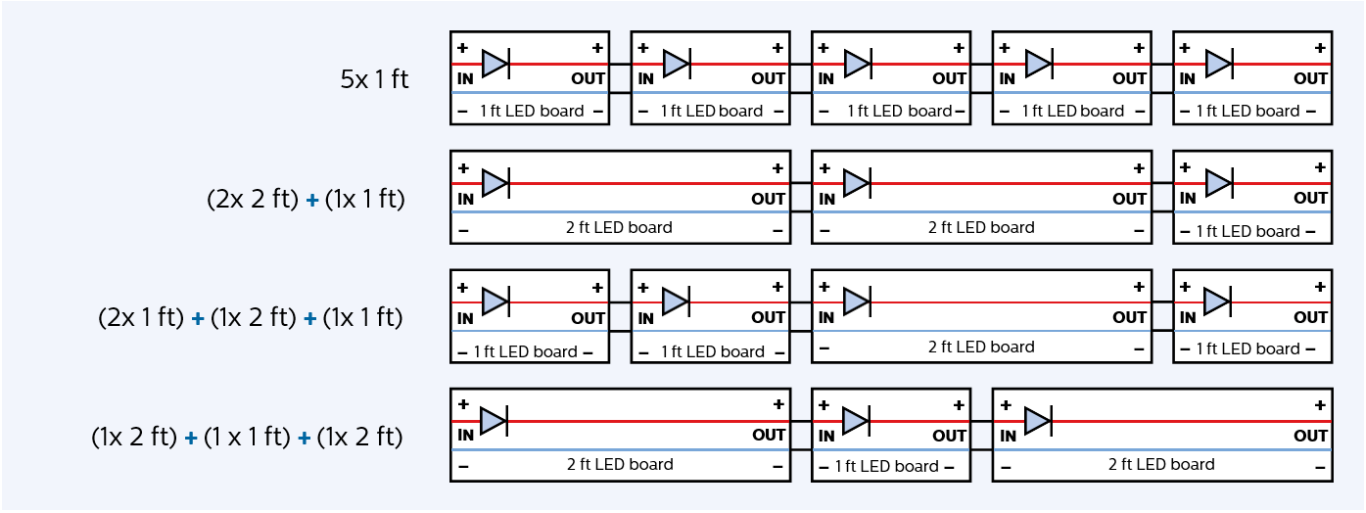

Two-channel systems like FlexTune and BioUp

In some systems the module must be connected to a two-channel driver. Examples are FlexTune (Tunable White, allowing e.g. circadian rhythm lighting) and BioUp (Cyan Enhanced Dynamic system for melatonin regulation).
In general, there are two positive LED+ as well as two negative LED-connector terminals on the driver:

1. A positive terminal for the Cool White channel (CW+)
2. A positive terminal for the Warm White channel (WW+)
3. A negative terminal for the Cool White channel (CW-)
4. A negative terminal for the Warm White channel (WW-)

Driver wiring

Connector terminals with their corresponding functions, as well as the proper way to connect them for a HV-modules (in series), are shown in the diagram below:

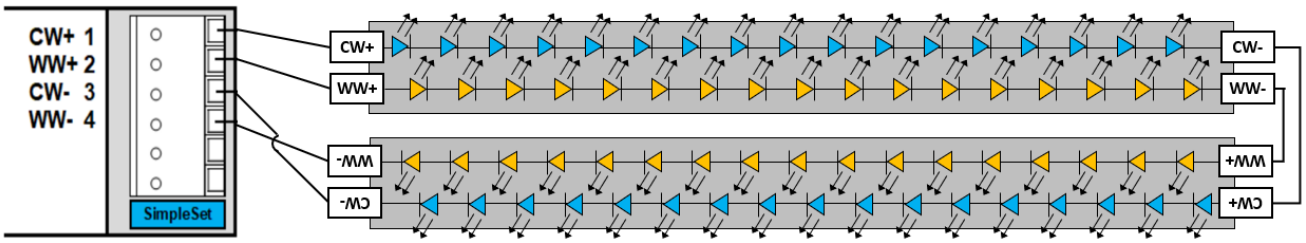

For LV-modules, connection (in parallel) is as follows:

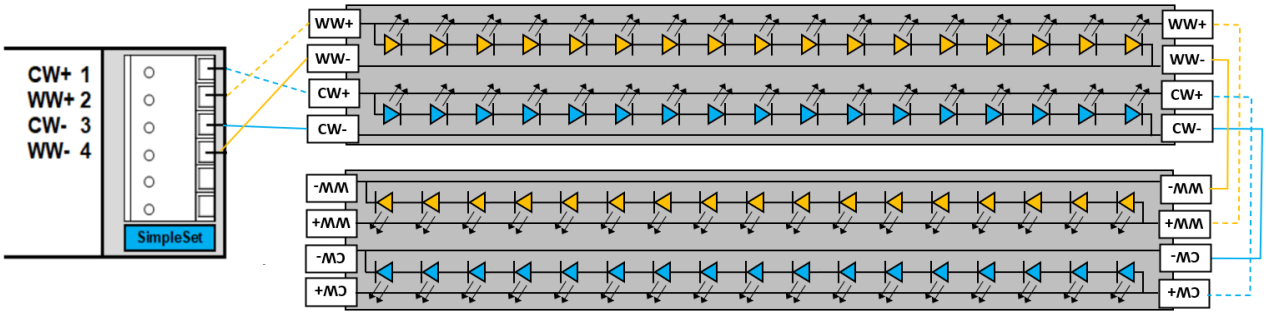

Important wiring guidelines

- The CW and WW connections are not interchangeable. Do not connect e.g. the minus return wire of the warm white string to the - CW driver connector or combine the WW+ with CW + or WW- with CW- to reduce the number of wires.
- Parallel connection of the two driver outputs is not supported.
- Keep wiring between the driver and the LED module as short as possible.
- Due to the CCT tuning design of the driver, there is a maximum length defined for any connection between the driver output and the LED module to maintain CCT tuning accuracy. Larger distances are permissible, but CCT tuning accuracy cannot be guaranteed and may impact EMC performance. Please consult the datasheet for the maximum allowable length.
- Keep the sets (+/-) of CW and WW wires between the driver output and LED module the same length whenever possible for the best performance.
- Route the CW- and WW- wires closely together. Consider twisting the CW- and WW- wires, where possible, for the best overall EMC performance.
- Remote mounting of the Xitanium SR FlexTune driver is not supported.

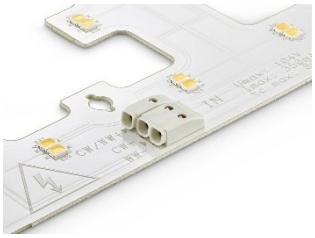

Two-channels modules with common + connector

Some modules (such as Fortimo LED Square FlexTune and BioUP) have a common + connector for both channels, see picture on the left. The diagram below shows the way to connect the modules to the driver.

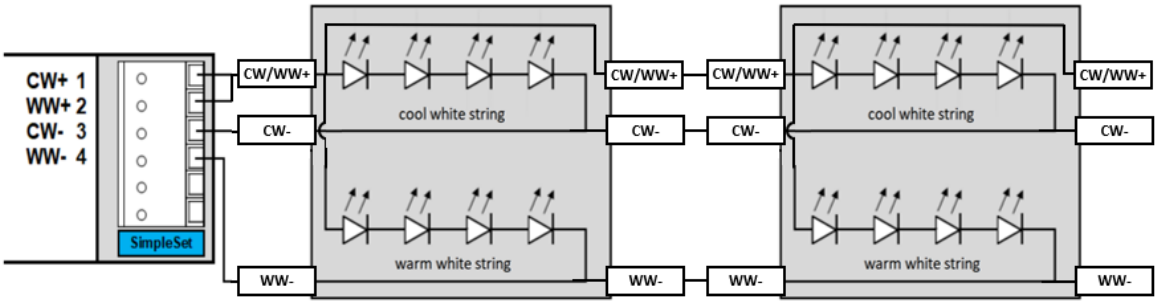

Wiring diagram of LED Square modules with common + connector, the modules are connected in parallel.



Fortimo LED Strip BioUP 1ft LV module



Fortimo LED Square FlexTune 1250 lm module

MultiOne Engineering settings for FlexTune and BioUp systems

The colour point, rated lumen, and rated output have to be set in MultiOne.
As an example the dashboard of MultiOne Engineering is shown in case a Xitanium FlexTune driver is being configured:

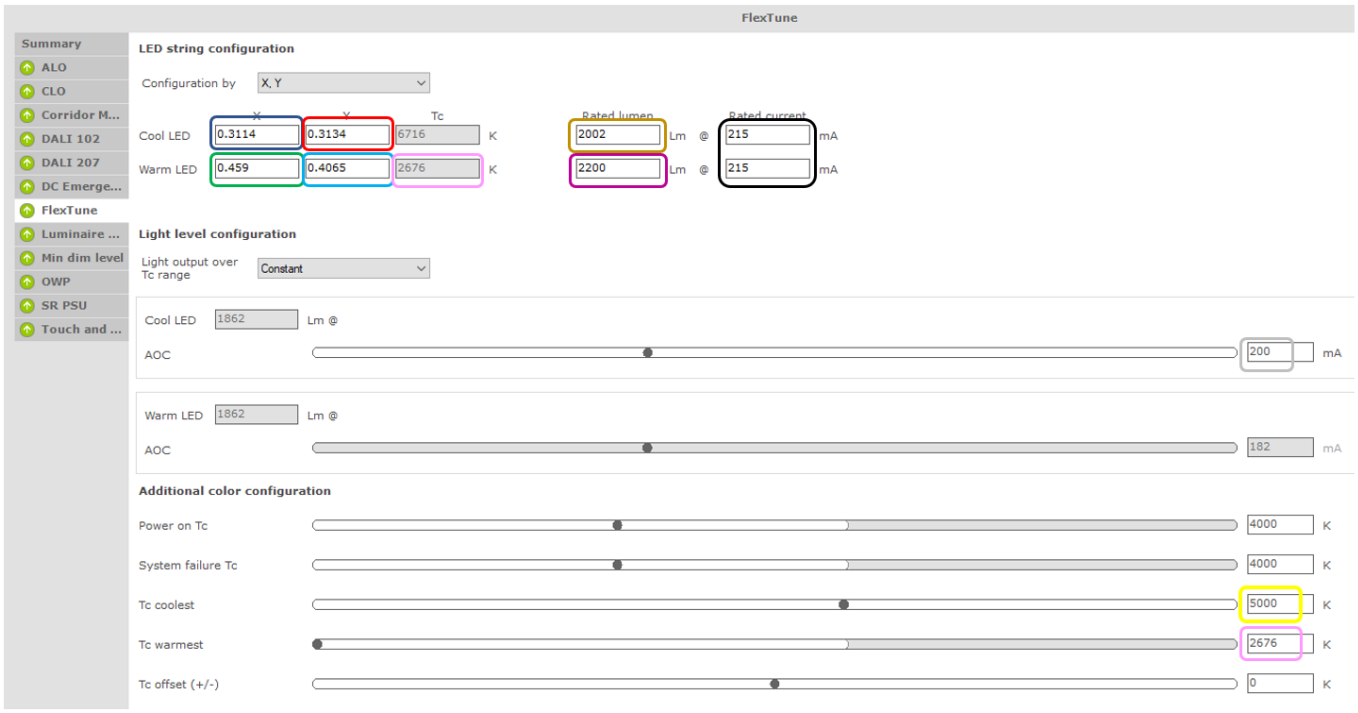

The coloured rectangles show the fields that must be filled in. These data can be found in the datasheet of the module, see screenshot form the datasheet of the 2ft HV BioUp-module:

Drive currents

Parameter	Nominal*	Life**	Max***	Unit
Fortimo LED Strip CED 2ft MF FC HV5	215	400	400	mA

For FlexTune driver configuration use 0.3114, 0.3134 (2002lm) and 0.4590 0.4065 (2200lm) for cool and warm LED, at a rated current of 215mA for both.

Under Light level configuration, choose the default value *Constant* and set the required current setting for the cool CCT. Based on the known color points and efficacies, the driver will calculate the proper current setting for the warm CCT. In this case we choose 200 mA, resulting in 1862 lumen for the cool CCT. The calculated current for this flux of the warm CCT is 182 mA.

An important setting is the Tc coolest. This is the coolest CCT that can be achieved with this system, which is for BioUP 5000K. The Tc warmest is 2676K, see under LED String Configuration.

All other MultiOne settings can be set as required.

Note:

- The values of the Cool LED under LED String Configuration are virtual. There is no physical LED on the module with this CCT. They are used for calculation purposes only.
- For more information, we refer to:
    - Drivers: Design-in Guide Xitanium SR Drivers
    - Multi-One: https://www.lighting.philips.co.uk/oem-emea/products/philips-multione-configurator

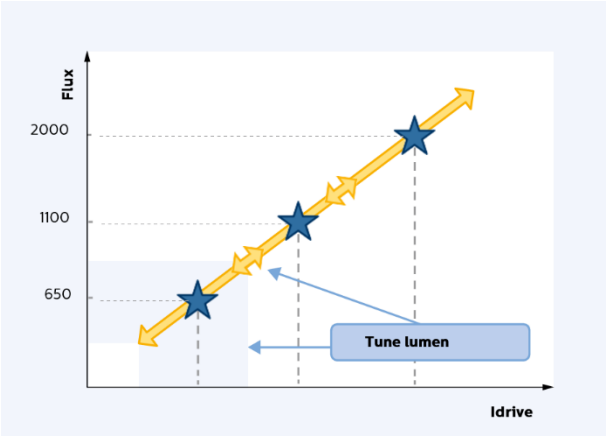

Indicated are the three lumen packages (blue stars; 650, 1100 and 2000 lm/ft). Yellow arrows schematically indicate the flux as function of the current around the nominal value: tuning.

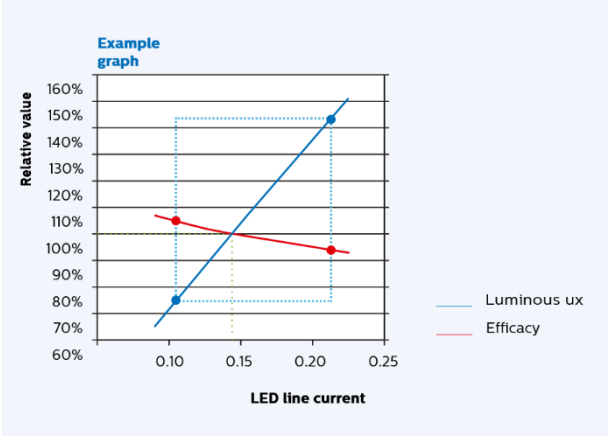

Example of tuning flux and efficacy by altering the drive current. For specific details please check the associated datasheet of the LED module you are using.

Example
For a given LED module, keeping Tc constant,

- doubling of the drive current (mA)
- leads approximately to a doubling of the flux
- and cost you only 10% efficacy (lm/W)

There is a large degree of freedom to tune to for example a desired luminaire lumen output.

How to... Use different LED module generations

When considering mixing LED Linear modules of different generations in one and the same system use precaution. On one driver (making a system), mixing should not be done. Reason is, besides possible interface differences, the different generations have a different operation point. Mixing the different generations on one driver would lead to a flux-imbalance. On the other hand, within a luminaire or in an installation, each generation driven by its own driver, the modules can be used side by side.

Whole lumen range covered with 3 building blocks

"I need 1200 lm/ft. That is not in the portfolio. Can I order these at Philips?"
"I am designing for even higher efficacy. Can I achieve that with Philips?"

Yes you can!
By means of tuning the drive current for the LED modules. With only three lumen packages (building blocks 650, 1100 and 2000 lm/ft) the fluorescent tube lumen range is covered.

How to... Tune the luminaire's flux and efficacy

The LED module specifications are provided under nominal conditions, like nominal flux at nominal current. An example could be 1100 lm at 250 mA. With Philips' Fortimo LED Linear system however it is possible to deviate from the LED module's nominal current. As current (mA) and flux (lm) are approximately linear proportional, by altering the current the flux will changes accordingly. The image on the left schematically shows the three lumen packages and the indication of the flux as function of the current; tuning.
At the same time also the required forward voltage (Vf) changes a bit, leading to a change in efficacy too (lm/W). The next table explains the impact and boundaries.

Important

In case the OEM chooses to set the current other than nominal, the lifetime and reliability of the LED module must be taken into account. The following current regions can be distinguished:

1. **Current < nominal current (mA)**
   a. Efficacy (lm/W) higher than nominal value lumen output (lm) lower than nominal value.
   b. Lifetime > 50,000 hours.
2. **Current between nominal current and lifetime current (mA)**
   a. Efficacy (lm/W) lower than nominal value lumen output (lm) higher than nominal value.
   b. Lifetime > 50,000 hours.
3. **Current between lifetime current and absolute maximum current (mA).**
   a. Efficacy (lm/W) lower than nominal value lumen output (lm) higher than nominal value.
   b. Lifetime < 50,000 hours.
4. **Current > absolute maximum current: do not exceed** the absolute maximum current as this can lead to LED module failure.



Example of a Set'n'drive resistor featured by BJB, fitted with a leaded resistor inside.

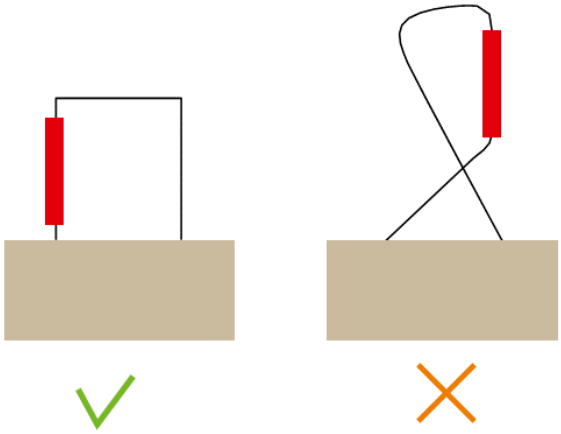

- Connect the wires straight to the driver.

The rated average life is based on engineering data testing and probability analysis. The hours are at the L70 B50 point.

An example is given below on how these values are stated in the associated LED module datasheet on www.philips.com/oem.

Fortimo LED Linear module	I nominal*	I life**	I max***
	mA	mA	mA
LED module example	150	200	250

Note:

* Nominal current at which performance is specified

** Value at which L70B50 ≥ 50,000 hour is specified.

*** Maximum current for safe operation

How to... Set the output current via Rset

Your lumen, your current

1 resistor value generates 1 current only at all window drivers as long as it fits within the driver window.

Why a resistor

1. Worldwide standardized building block.
2. 2Worldwide availability and well documented
3. Freedom for OEM to choose the value and supplier.

Resistor placed into driver enables you to

1. Connect different configurations, not just a unique solution.
2. Drive different type of LED modules, not restricted to one type.
3. Select and tune the current, hence flux or Tc.
4.

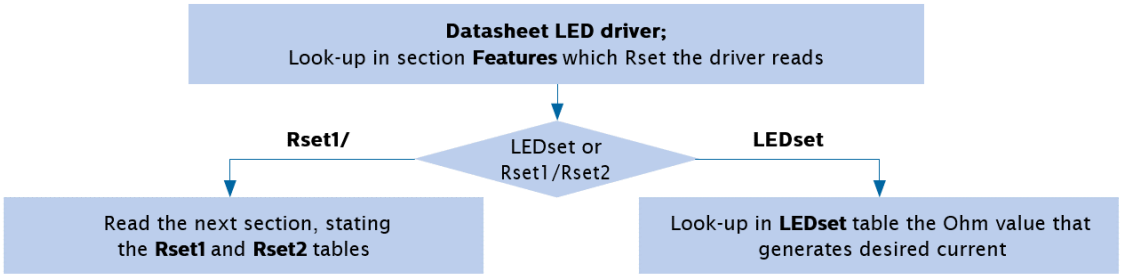

Note on E-series: in electronics, international standard IEC 60063 defines preferred number series for amongst others resistors. It subdivides the interval between subsequent values from 1 to 10 into 6, 12, 24, 48, 96 etc. steps. These subdivisions ensure that when some arbitrary value is replaced with the nearest preferred number, the maximum relative error will be on the order of 20%, 10%, 5%, 1% etc.

LEDset – E96 series: table with E96 resistor values

LEDset [Ω]	Idrive [mA]	LEDset [Ω]	Iset [mA]	LEDset [Ω]	Iset [mA]	LEDset [Ω]	Iset [mA]
open	avoid*	23700	211	11000	455	5110	978
49900	100	23200	216	10700	467	4990	1002
48700	103	22600	221	10500	476	4870	1027
47500	105	22100	226	10200	490	4750	1053
46400	108	21500	233	10000	500	4640	1078
45300	110	21000	238	9760	512	4530	1104
44200	113	20500	244	9530	525	4420	1131
43200	116	20000	250	9310	537	4320	1157
42200	118	19600	255	9090	550	4220	1185
41200	121	19100	262	8870	564	4120	1214
40200	124	18700	267	8660	577	4020	1244
39200	128	18200	275	8450	592	3920	1276
38300	131	17800	281	8250	606	3830	1305
37400	134	17400	287	8060	620	3740	1337
36500	137	16900	296	7870	635	3650	1370
35700	140	16500	303	7680	651	3570	1401
34800	144	16200	309	7500	667	3480	1437
34000	147	15800	316	7320	683	3400	1471
33200	151	15400	325	7150	699	3320	1506
32400	154	15000	333	6980	716	3240	1543
31600	158	14700	340	6810	734	3160	1582
30900	162	14300	350	6650	752	3090	1618
30100	166	14000	357	6490	770	3010	1661
29400	170	13700	365	6340	789	2940	1701
28700	174	13300	376	6190	808	2870	1742
28000	179	13000	385	6040	828	2800	1786
27400	182	12700	394	5900	847	2740	1825
26700	187	12400	403	5760	868	2670	1873
26100	192	12100	413	5620	890	2610	1916
25500	196	11800	424	5490	911	2550	1961
24900	201	11500	435	5360	933	2490	2008
24300	206	11300	442	5230	956	short	avoid**

* default driver current, however not stable. For details see section on 'Default driver output current'

** maximum driver current, however not absolute. For details see section on 'Default driver output current'

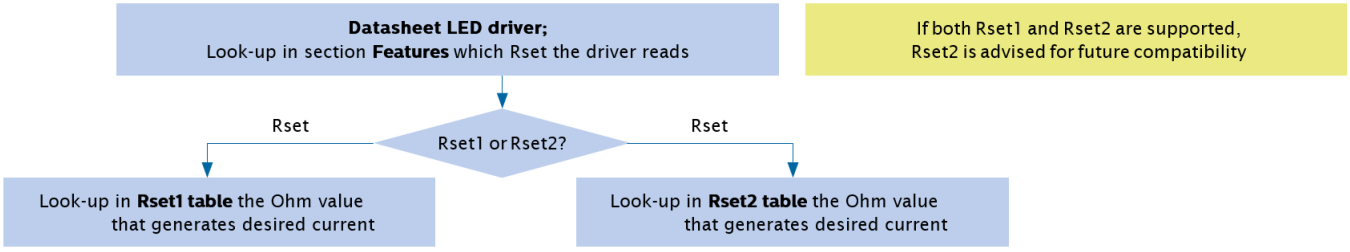

Note on E-series: in electronics, international standard IEC 60063 defines preferred number series for amongst others resistors. It subdivides the interval between subsequent values from 1 to 10 into 6, 12, 24, 48, 96 etc. steps. These subdivisions ensure that when some arbitrary value is replaced with the nearest preferred number, the maximum relative error will be on the order of 20%, 10%, 5%, 1% etc.

Note: next page shows extended Rset2 table: E96 values, stating smaller increments

Rset1 – E24 series

Ret1 [Ω]	Iset [mA]	Ret1 [Ω]	Iset [mA]	Ret1 [Ω]	Iset [mA]	Ret1 [Ω]	Iset [mA]
39	200	510	292	6k8	583	91k	690
43	201	560	300	7k5	591	100k	691
47	202	620	309	8k2	599	110k	692
51	203	680	318	9k1	60	120k	693
56	204	750	327	10k	614	130k	693
62	206	820	336	11k	621	150k	695
68	208	910	347	12k	627	160k	695
75	209	1k	358	13k	632	180k	696
82	210	1k1	369	15k	640	200k	696
91	212	1k2	379	16k	643	220k	697
100	215	1k3	388	18k	649	240k	697
110	217	1k5	406	20k	654	270k	698
120	219	1k6	414	22k	658	300k	698
130	221	1k8	429	24k	661	330k	698
150	226	2k	442	27k	665	360k	699
160	228	2k2	455	30k	669	390k	699
180	232	2k4	466	33k	671	430k	699
200	236	2k7	481	36k	674	470k	699
220	240	3k	494	39k	676	510k	699
240	244	3k3	505	43k	678	560k	700
270	250	3k6	517	47k	680	620k	700
300	256	3k9	525	51k	682	680k	700
330	261	4k3	536	56k	683	750k	700
360	267	4k7	546	62k	685	820k	700
390	272	5k1	555	68k	686	910k	700
430	279	5k6	564	75k	688	1M	700
470	286	6k2	574	82k	689	No Rset	default

Rset2 – E24 series

Ret1 [Ω]	Iset [mA]	Ret1 [Ω]	Iset [mA]	Ret1 [Ω]	Iset [mA]	Ret1 [Ω]	Iset [mA]
short	100	430	245	2k	733	9k1	1558
100	100	470	261	2k2	780	10k	1604
110	106	510	277	2k4	823	11k	1653
120	111	560	297	2k7	884	12k	1694
130	116	620	318	3k	941	13k	1730
150	121	680	340	3k3	993	15k	1793
160	130	750	368	3k6	1042	16k	1817
180	13	820	392	3k9	1086	18k	1864
200	146	910	422	4k3	1143	20k	1902
220	155	1k	452	4k7	1192	22k	1935
240	166	1k1	485	5k1	1238	24k	1965
270	176	1k2	515	5k6	1293	27k	2000
300	190	1k3	545	6k2	1350	No Rset	default
330	204	1k5	602	6k8	1402		
360	215	1k6	632	7k5	1454		
390	228	1k8	684	8k2	1503		

Rset priority behavior for drivers that read both Rset1 and Rset2

Rset1	Rset1	Driver status
Open	Open	Driver's default current (see datasheet)
Rset	Open	Rset1
Open	Rset	Rset2
Rset	Rset	Rset2
Short	Open	Rset1 (driver's minimum current, see datasheet)
Short	Short	Rset2 (driver's minimum current, see datasheet)
Open	Short	Rset2 (driver's minimum current, see datasheet)

Rset2 – E96 series: extended table with E96 values, stating smaller increments but covering same range as the E24 series on previous page

Rset2 [Ω]	Iset [mA]	Rset2 [Ω]	Iset [mA]	Rset2 [Ω]	Iset [mA]	Rset2 [Ω]	Iset [mA]	Rset2 [Ω]	Iset [mA]	Rset2 [Ω]	Iset [mA]
short	min.	255	171	665	335	1,740	669	4,530	1,171	11,800	1,686
100	100	261	173	681	341	1780	679	4640	1185	12100	1698
102	101	267	175	698	347	1820	689	4750	1198	12400	1708
105	103	274	178	715	354	1870	701	4870	1212	12700	1719
107	104	280	181	732	361	1910	711	4990	1226	13000	1730
110	105	287	184	750	368	1960	724	5110	1239	13300	1739
113	107	294	187	768	374	2000	733	5230	1253	13700	1752
115	108	301	191	787	381	2050	745	5360	1267	14000	1761
118	110	309	194	806	387	2100	757	5490	1281	14300	1771
121	111	316	197	825	394	2150	768	5620	1295	14700	1783
124	113	324	201	845	400	2210	782	5760	1308	15000	1793
127	115	332	204	866	407	2260	793	5900	1322	15400	1802
130	116	340	207	887	414	2320	806	6040	1335	15800	1812
133	118	348	210	909	422	2370	817	6190	1349	16200	1822
137	119	357	214	931	429	2430	829	6340	1362	16500	1829
140	120	365	217	953	436	2490	841	6490	1375	16900	1838
143	122	374	221	976	444	2550	853	6650	1389	17400	1850
147	123	383	225	1000	452	2610	865	6810	1403	17800	1859
150	125	392	229	1020	459	2670	877	6980	1415	18200	1867
154	127	402	233	1050	469	2740	891	7150	1428	18700	1877
158	129	412	237	1070	475	2800	903	7320	1441	19100	1885
162	131	422	241	1100	485	2870	916	7500	1454	19600	1894
165	132	432	246	1130	494	2940	929	7680	1467	20000	1902
169	134	442	250	1150	500	3010	943	7870	1480	20500	1910
174	136	453	254	1180	509	3090	956	8060	1493	21000	1918
178	137	464	259	1210	518	3160	968	8250	1506	21500	1926
182	139	475	263	1240	527	3240	982	8450	1518	22100	1936
187	141	487	268	1270	536	3320	996	8660	1531	22600	1943
191	143	499	273	1300	545	3400	1009	8870	1544	23200	1952
196	145	511	278	1330	554	3480	1022	9090	1557	23700	1960
200	146	523	282	1370	565	3570	1037	9310	1569	24300	1968
205	148	536	287	1400	574	3650	1049	9530	1580	24900	1975
210	151	549	292	1430	582	3740	1062	9760	1592	25500	1982
215	153	562	297	1470	594	3830	1075	10000	1604	26100	1989
221	155	576	302	1500	602	3920	1088	10200	1614	26700	1996
226	158	590	307	1540	614	4020	1103	10500	1629	27000	2000
232	161	604	313	1580	626	4120	1117	10700	1639	open	default
237	164	619	318	1620	638	4220	1131	11000	1653		
243	167	634	323	1650	645	4320	1145	11300	1666		
249	169	649	329	1690	656	4420	1158	11500	1674		

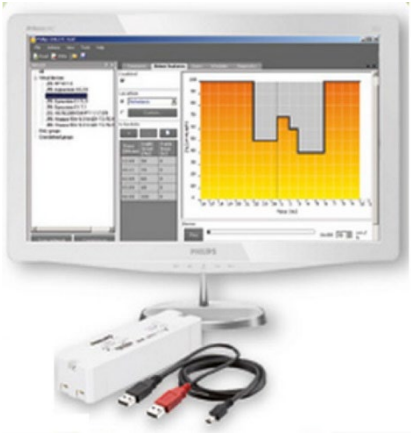

How to... Configure your driver with Philips MultiOne

The Xitanium TD drivers offer a full range of controls, enabling customizable luminaire design and performance. It is possible to control light output levels, preset dimming protocols and set system specifications in the factory and even in the complete installations in the field. This can be done with the Philips MultiOne configurator software. The MultiOne configurator software is an intuitive tool that unlocks the full potential of all programmable drivers from Philips, ensuring that the driver performance matches the needs of the lighting solution. It offers unprecedented flexibility, before, during and after the product installation.

For more information and latest version please visit
www.philips.com/multione.
This site contains detailed information on how to install the software and how to program the driver.

How to... Wire - general remarks

Direct wiring between driver and LED modules

Be informed that no components are allowed between the LED driver and LED modules other than connectors and wiring intended to connect the LED driver to the LED module. For example, it is not allowed to install a switch between the driver and LED modules.



Examples of solutions for pairing wires

Two wires into one connector hole

In some scenarios two wires need to be connected to one connector hole. In this case the pairing must be done outside the driver, resulting in only one wire going into the driver. Two wires into one connector hole are not supported.



Twin-wire ferrules

Ferrules

The reliability of twin-wire ferrules (or “wire end stop”) in combination with the wire intended to use, should be checked with the supplier of these ferrules.

Cables and wires

With the current Philips LED Linear modules standard solid core installation wire can be used. This approach allows the OEM to choose the preferred supplier, as well as preferred cable properties like color, thickness, lengths, although mains-rated wiring is advised. Please check the LED module and driver datasheet for details like wire thickness and strip length on:
https://www.lighting.philips.co.uk/oem-emea.

Automatic wiring by robot

LED Linear portfolio is enabled for automatic robot wiring, as are the Philips Indoor Linear LED drivers. For implementation details please check with your robot manufacturer.

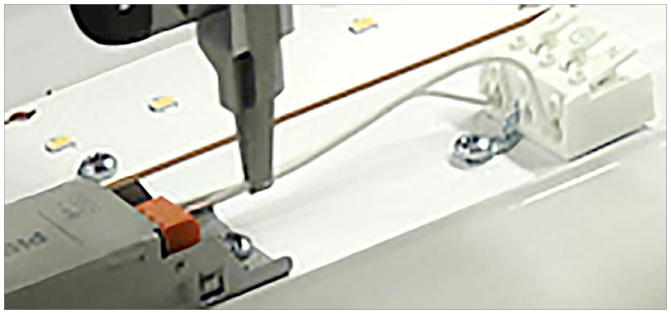

Connecting the LED module to the driver

On the LED modules, connectors are marked ‘IN’ or ‘OUT’, with a ‘+’or ‘-’, or both. LED Linear modules are polarity sensitive. Please assure a correct wiring before switching on the LED driver. In a ‘2-chain’ configuration, 2 pluses and 2 minuses must be connected to the driver.



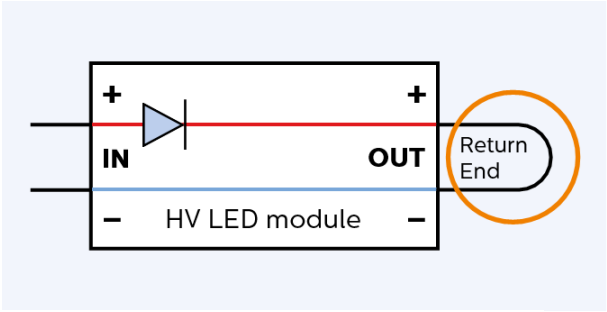

Schematic representation of the Return-End cable Mounted on a double-pole connector

Currently Philips offers only single channel Linear drivers, meaning that if double '+' and '–' are present at the driver output, these are in parallel. Only one current (mA) can be drawn from the driver. See also the Design-In Guide Xitanium Indoor Linear LED Drivers on www.philips.com/oem.

Interconnecting LED modules

By default the cables are connected from the 'OUT' connector of a LED module to the 'IN' connector of the next in line LED module, keeping the polarity ('+' and '–') consistent. However different wiring schemes could be possible (see previous paragraph on wiring). LED Linear modules are polarity sensitive. Please assure a correct wiring before switching on the LED driver.

Return-end connection (HV double-pole product only)

A short piece of wire to form a loop-back, typical 5 cm long, as explained in previous section on System Configurations.

Connecting the driver to the mains supply

The mains supply must be connected to the LED driver, not the LED module.

Warning

Connecting the luminaire to protective earth
If the driver needs to be connected to Protective Earth, like non-isolated Xitanium LED drivers and CertaDrive LED drivers, then also the luminaire needs to be connected to protective earth in order to comply with safety regulations and EMI. Please also consult the Design-In Guide of the Xitanium Indoor Linear LED drivers on https://www.lighting.philips.co.uk/oem-emea.

Electromagnetic compatibility (EMC)

Electromagnetic compatibility (EMC) is the ability of a device or system to operate satisfactorily in its electromagnetic environment without causing unacceptable interference in practical situations. In general, LED modules have no effect on the EMC of a luminaire. The Philips LED Linear family modules are evaluated in combination with a Philips Linear LED driver in a reference luminaire, according to the standards mentioned in the table below. No issues were observed.

Philips Indoor Linear LED drivers meet EMC requirements per CISPR 15 ed 7.2. The test is conducted with a reference setup that includes a driver and an LED load mounted on a metal plate.

Cable length and EMC

Philips has successfully performed EMC tests for a total length 4 m (sum of wire length and length of the LED Linear modules). For longer lengths it is advised to repeat these tests.

How to... Improve EMI performance

As mentioned before, the total amount of parasitic current needs to be minimized. For that reason, the following practical precautions need to be taken into account in a lighting system to minimize EMI:

- Minimize the Differential Mode (DM) loop area of the lamp wires going from the driver to the light source by keeping the wires close together (bundling). This will minimize the magnetic field and reduce the radiated EMI. Long linear light sources are also part of that loop.
- Minimize the Common Mode (CM) parasitic capacitance of the output wiring + light source to earth by keeping the length of the wires between driver and light source as short as possible. Also minimize the copper cooling area on the LED PCB and keep the length of the incoming mains wire inside the luminaire as short as possible.
- Keep mains and control wires(DALI, 0-10 V) separated from the output wires (do not bundle).
- Ground the lighting system chassis and other internal metal parts to protective earth (PE, class I luminaires) and do not let large metal parts “float”. Always use the safety or functional earth connector or wire from the lamp driver. Or use equipotential connecting wires for all internal floating metal parts which are inaccessable (class II luminaires). Keep safety and functional earth wires as short as possible to minimize their inductance, use as much as possible large metal areas (chassis, mounting plates, brackets) for earthing purposes instead.
- For Class II it is advised to establish a functional earth (FE) connection between all larger conductive, non-accessible luminaire parts and the driver to remedy potential EMC problems.
- Sometimes, radiated EMC compliance cannot be achieved, necessitating the use of a 100 ... 300 ∧ axial ferrite bead(s) for either mains or lamp wiring (effective for interference between 30 MHz and 300 MHz), or coupling the wires through ferrite cores within the luminaire may improve the overall EMC performance. However, selection of the type and characteristics of the additional filter depends on what frequency components have to be damped and by how much.

Adhering to these rules will help in EMC compliance. For further questions, please contact your local Philips representative. Alternatively, the Philips Lighting OEM Design-In team could be consulted for a possible solution.

Mechanical design-in

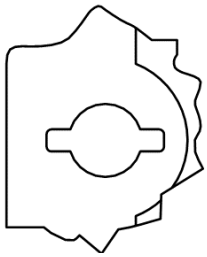

Example of a fixation slit-hole

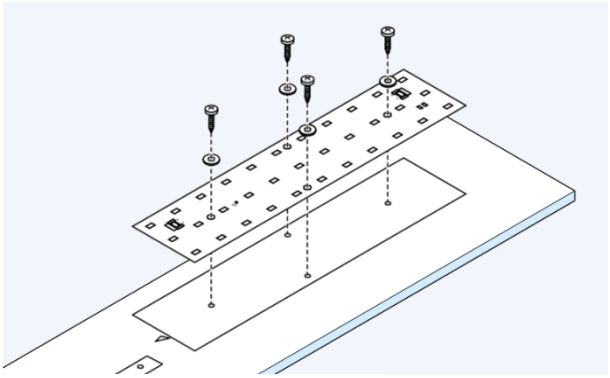

Example of using washers

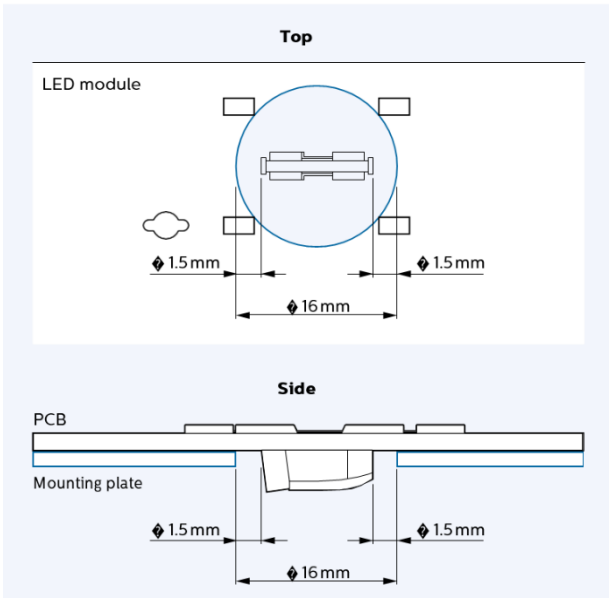

Mechanical fixation and creepage for LED Linear modules

To allow performance achieving the specification, it is advised to use all mounting holes. Optionally you can omit some fixation points and evaluate the board's performance on mechanical flatness and thermal contact. Make sure the boards are thermally in good contact with the mounting surface. This can be verified by measuring the Tc temperature. When in good thermal contact, it is likely no additional thermal paste or cooling bodies are required.

Screws, washers, and fixation holes

Each LED module fixation hole accepts either M4 (or size 8) or M3 screws. OEMs may choose different size screws, as long as the creepage and clearance are guarded. When using washers, we recommend using insulating washers and not metal washers, as with metal washers the creepage distance of earthed screw connection with respect to PCB tracks is more difficult to be guaranteed.

To ensure the electrical insulation when using for example M4 metal screws, the diameter of the screw head (and optional metal washer) must not exceed 8 mm. When using electrically non-conductive materials the size can be larger than 8mm diameter.

Some LED Linear types have holes available for mounting electrically non-conductive optics. The electrical isolation distance around these holes is not suitable for metal screws. Do not use these holes for mounting and fixating the LED module.

Damage of insulation layer by screws or clamps

In general, the surface of the PCB must not be damaged by mounting materials as this may compromise the electrical isolating layer. However, scratching of the PCB's white top layer in the region that is intended for fixation by screw or clamp will not lead to loss of function or reliability. The area around fixation holes does not carry any copper tracks. This can be seen when looking carefully at the LED module. The mounting materials must still comply with the relevant creepage and clearance.

How to... Define cut-out for modules with a back-side connector

Depending on the maximum driver output voltages that can occur, IEC 60598 -1 (IEC Luminaire standard) prescribes minimum distances.

To ensure the creepage requirement is met, for LED modules comprising a back-side wire connector consider a cut-out hole in the mounting plate (e.g. luminaire housing) that meets the distances as indicated in the drawings on the left which can be deducted from IEC 60598 together with the driver information and application conditions.

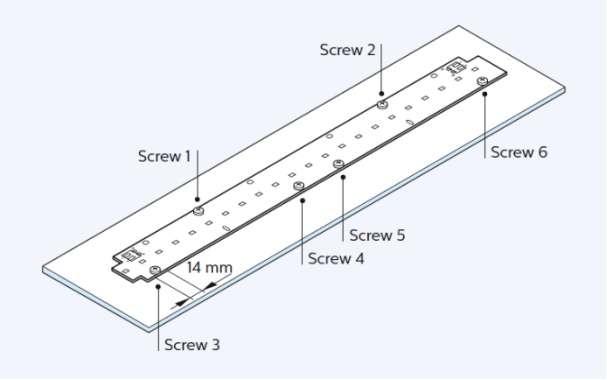

Example of fixation with 6 screws

Screw torque

The maximum torque that should be applied depends on the screw type and luminaire material. The fasteners used to secure the LED module to a heat sink must be tightened with a torque in accordance with the table below.

Screw torque	min	max
Steel or aluminum, threaded/tektite	0.6 Nm	1.0 Nm

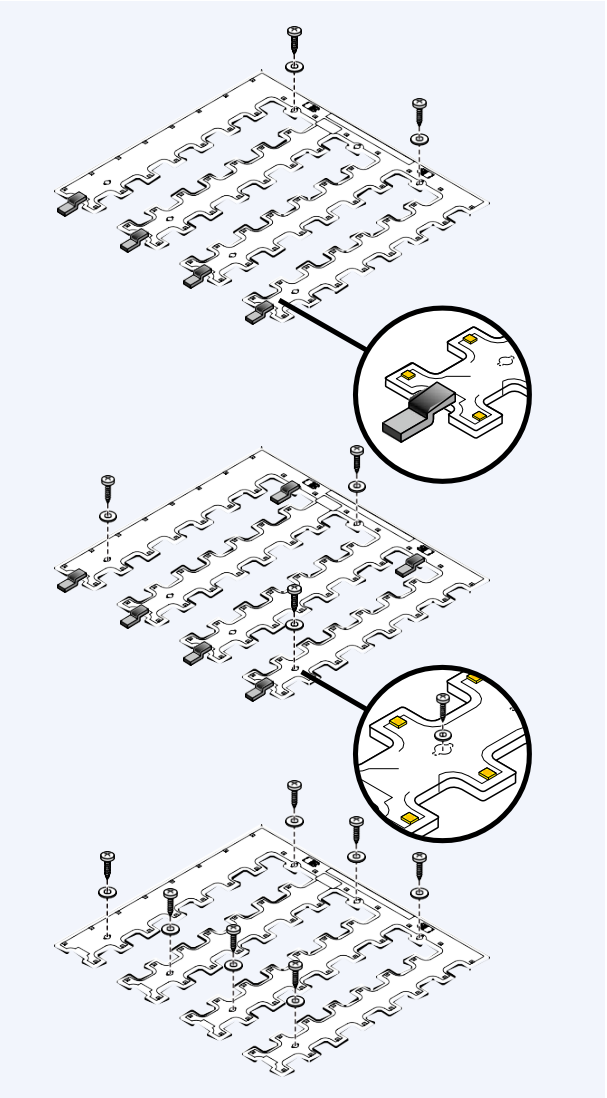

Alternative fixation methods

Clamps

With Philips LED Linear modules fixation methods other than screws can be explored, potentially leading to fewer screws and faster mounting. In order to achieve this, larger copper-free areas have been designed around the mounting holes. This freedom applies to the whole LED Line portfolio. Be careful that the clamp pressure on the PCB still enables flat assembly of the LED Linear module. Avoid that the clamp somehow prevents the product from taking a flat position, which is required to make good thermal contact with the luminaire.

As an example, for the LED Square module using clamps, three different mounting scenarios are depicted on the left. Each clamp used must comply with a 3 mm distance from clamp to the copper track in all directions on the LED module. A similar approach holds for the linear LED modules, as indicated below.

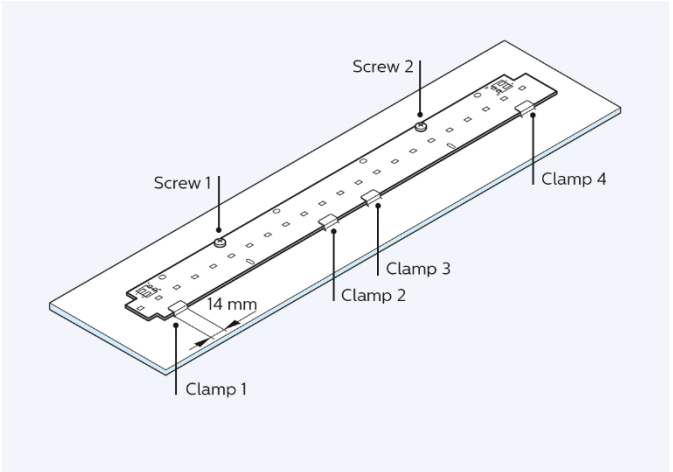

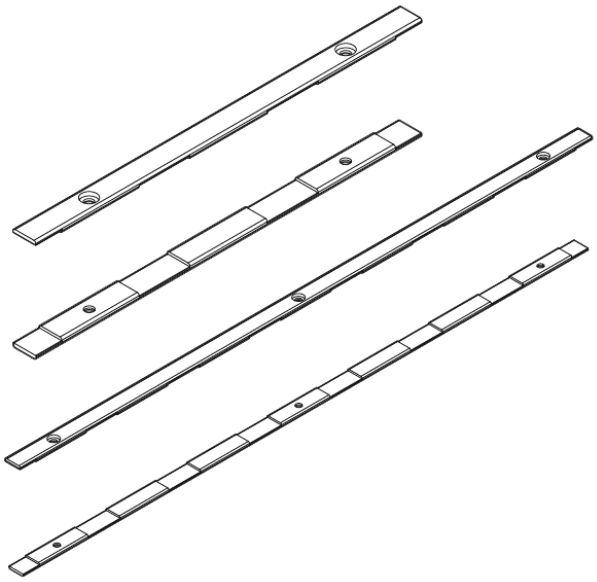

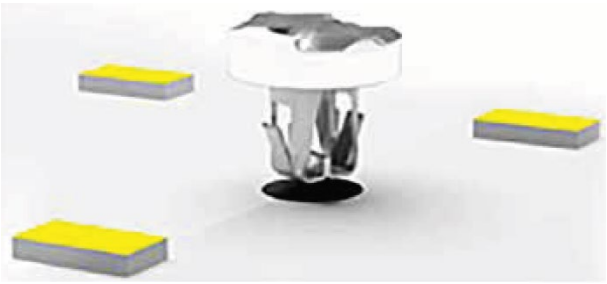

Example of a Push to Fix component by BJB



Example of a Florence Press Fit Screw Replacement component by LEDiL

Mounting Strip for LED Square modules

With Philips LED Square modules fixation methods other than screws can be explored, likely leading to fewer screws, and faster mounting times. For example, using so called mounting strips as designated in the images on the left. Make sure that the strip pressure on the PCB still enables flat assembly of the LED Linear module. It is undesired if the strip somehow prevents the product from taking a flat position to make good thermal contact with the luminaire. A shorter strip for LED Square 1250lm and a longer one for LED Square 2500lm or 2x LED Square 1250lm. Additional info on the mechanical drawing examples can be obtains via your local Philips representative.

Complementary partners for fixation alternatives

Fixation materials, such as screws, are not part of the Philips LED Linear system offering. This is an added-value area for OEMs, offering the possibility to differentiate. However, there are several suppliers offering push-and-fix-like components or adhesive tapes, enabling quick and easy luminaire creation. Some of these are listed in the complementary partner section in our LED Catalogue (both available printed and digital) or in the Support section on www.philips.com/oem.

Reference to these products does not necessarily mean they are endorsed by Philips. Philips gives no warranties regarding these products and assumes no legal liability or responsibility for any loss or damage resulting from the use of the information given here. We advise not to use bare plastic push pin fasteners (without any metal parts) as these are likely to wear out before the lifetime of the LED product is reached, reducing the mechanical and thermal contact between the LED module and the luminaire.

0.25ft modules

The 0.25ft modules are delivered as pairs of two boards. Before usage they must be separated by breaking the board gently along the zig-zag edge.

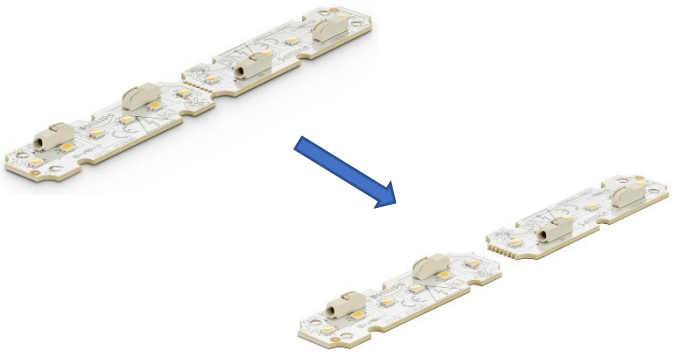

Optical design-in

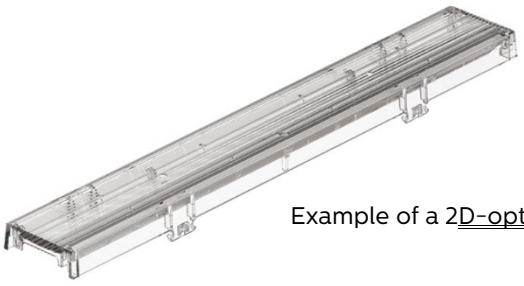

Example of a 2D-optics



Example of a 3D-optics

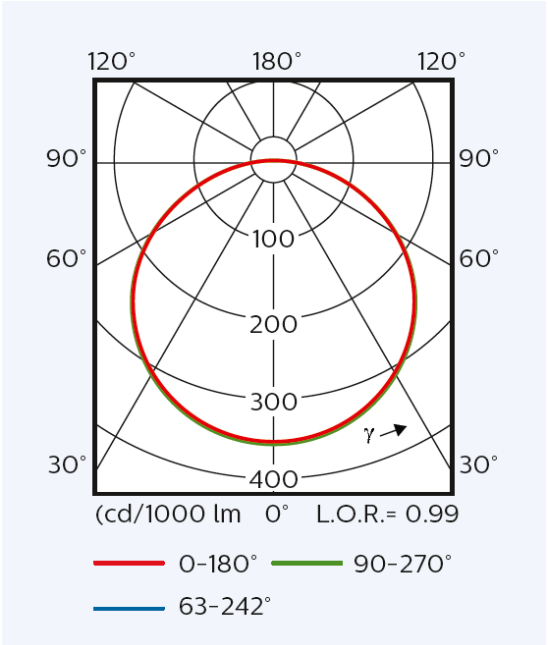

Optics on top of, or near the LED Linear modules

Luminaire manufacturers have the freedom to design their own optics to maximize the lm/W efficiency and to define the beam shape of the system.

Additional fixation holes are provided in most LED Linear modules to align electrically non-conductive optics onto the LED module. These are holes without a slit. To allow possible future changes it is advised to consider some additional room around the connector when designing optic directly onto the LED module.

3D-optics – Fortimo LED Strip OC

The use of 3D optics (individual lenses for every LED of the module), requires sufficient distance between the LED's. That is the reason we have two Fortimo LED Strip Families:

- Fortimo LED Strip: small LED-pitch, suitable for 2D-optics only.
- Fortimo LED Strip OC: larger LED-pitch suitable for 3D-optics. You can find information about a series of 3D-optics on the OEM website www.philips.com/oem.

Complementary partners for optics

Secondary optics is not part of the Philips LED Linear system offering. This is an added-value area for OEMs, offering the possibility to differentiate. However, there are many companies offering for example reflectors, lenses or bulk diffusers who have a standard portfolio of compatible optics available, enabling quick and easy luminaire creation. Some of these are listed in the complementary partner section in our LED Catalogue (both available printed and digital) or on Internet:
https://www.lighting.philips.co.uk/oem-emea/support/oem-complementary-partners
Reference to these products does not necessarily mean they are endorsed by Philips. Philips gives no warranties regarding these products and assumes no legal liability or responsibility for any loss or damage resulting from the use of the information given here.

Light distribution

Philips LED Linear modules generate a Lambertian beam shape (see light distribution diagram). The IES (or .ldt) files are available via the website www.philips.com/oem.

Ray sets

Ray set files of the LED's are available for customer use, and can be downloaded from the download section on www.philips.com/oem.
Ray set files are available containing 100,000, 500,000 and 5,000,000 rays, although due to their size the last two types are not in the download section. Please contact your Philips representative to obtain these separately if required.

Color Consistency (SDCM)

Color consistency refers to the spread in color points between modules. It is specified in SDCM (Standard Deviation of Color Matching) or MacAdam ellipses, which are identical. The value refers to the size of an ellipse around a point close to the black body locus. Staying within this ellipse results in a consistency of light which ensures that no color difference is perceivable between one LED module and another with the naked eye in most applications.

SDCM value in the datasheet represents an integrated measurement over the complete LED module.

Please, be aware that in applications that are more sensitive for color differences (color consistency of <3 SDCM) such as wall washers (<2 SDCM), we advise you to contact your local Philips representative or the Philips design-in team for expertise and support in luminaire design and evaluation.

Color targets (CCT)

The color target points of both Correlated Color Temperature (CCT) and Color coordinates (CIEx, CIEy) of the Philips LED modules are found in the respective datasheets on www.philips.com/oem.

Spectral light distribution

The typical spectral light distributions of the Philips LED modules are shown in the respective datasheets on www.philips.com/oem.

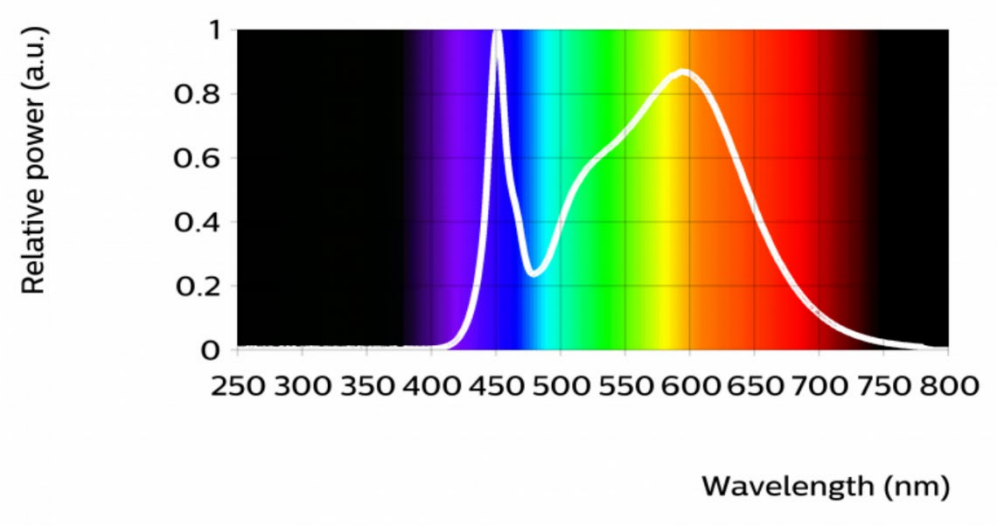

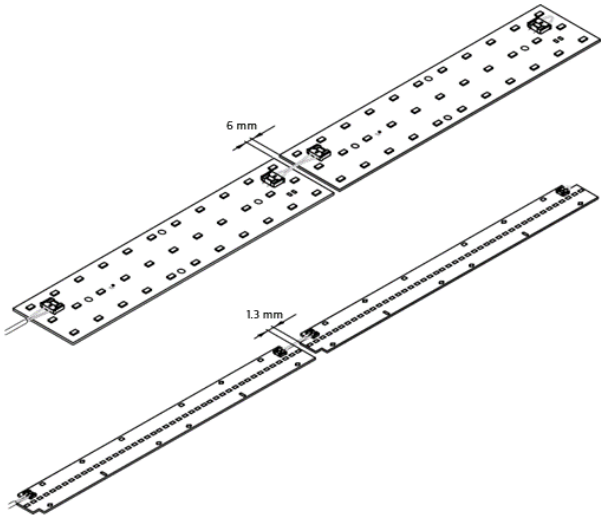

Warning

If a luminaire requires protective earth, all conductive parts – like the reflector – must be electrically connected to protective earth in order to prevent hazardous conditions!

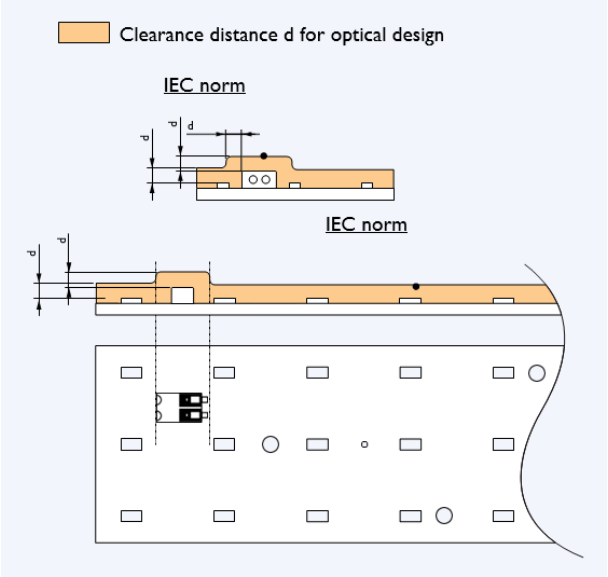

Clearance distances required for optical design around LED Linear modules

Continuous LED pitch

To achieve optimal lighting uniformity, it is advised to keep the LED pitch between the modules the same as on the module itself. As an example, for current LED Line 3R modules the modules should be 6mm apart. For LED Line 1R modules that should be 1.3 mm. This distance can be derived from the measures in the drawings provided in the datasheet of the LED module you use, in the download section on www.philips.com/oem.

Reflector design

If a reflector is designed around the LED module, it is essential to allow a proper clearance distance between the LED module and reflector around the LED module surface, LEDs and the connectors (see drawing below). This clearance distance is necessary to ensure safe insulation of the system and is in line with IEC regulations 60598 to prevent short circuiting, damage, and an open circuit to the LED module.

Required minimum clearance distance

Depending on the maximum driver output voltages that can occur, IEC 60598 -1 (IEC Luminaire standard) prescribes minimum clearance distances. This distance is indicated in below graphic as ‘d’ and can be deducted from IEC 60598 together with the driver information and application conditions.

For example, HV product on a 250V maximum output driver requires ‘d’ to be at least 3mm minimum, provided the conductor (e.g., reflector) is earthed. When not earthed, ‘d’ needs to be 6mm minimum in this example.

LV product on a 54V maximum output driver requires ‘d’ to be at least 1mm minimum in this example.

Check the IEC Luminaire standard for the most recent required distances.

Thermal design-in

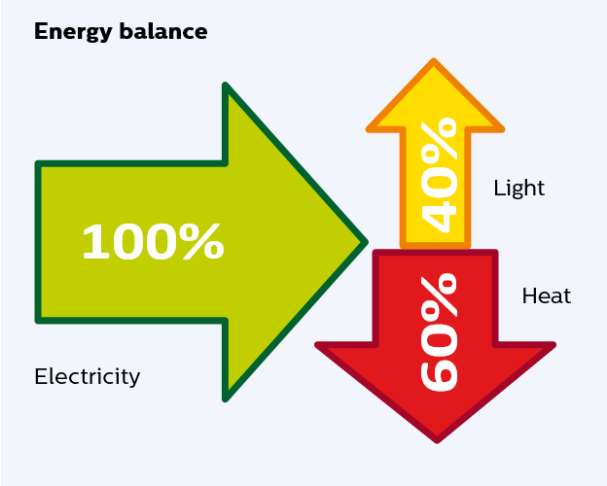

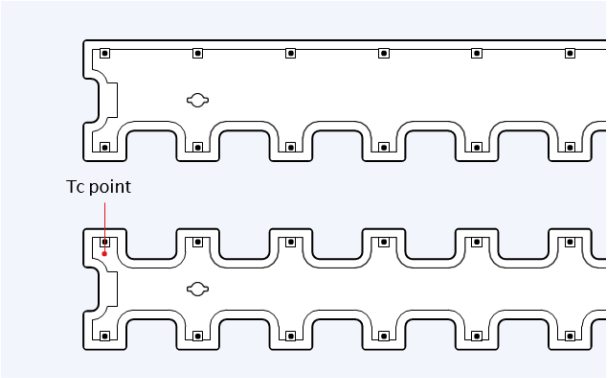

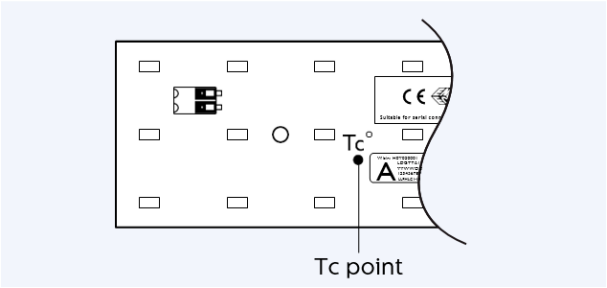

Examples of Tc point position

Introduction

To facilitate design-in of Philips LED Linear systems, the critical thermal management points of the LED modules and driver are set out in this section. Our product design is optimized in order to keep the component temperature in your application as low as possible.
However, the thermal design of your luminaire is of utmost importance. If the points of attention given in this section are taken into account, you will get the optimum thermal performance and lifetime of your system.

Definitions

- LED module temperature: temperature measured at the Tc point of the LED module.
- Driver temperature: temperature measured at the Tc point of the driver.
- Ambient temperature (Tamb): temperature outside the luminaire.

When switched off >2 hours, temperature at Tc point is likely to equal Tamb.

Thermal behaviour of indoor linear LED drivers

Besides the LED modules, the driver is an important component. For specific design-in guidelines, please consult the design-in guide for the Xitanium indoor linear LED drivers and the associated driver datasheet, to be found on the download section of www.philips.com/oem.

Tc point

The Tc test point indicates a reference point for measuring the LED module's temperature. This can be used during the luminaire design to verify that the temperature remains below the maximum specified temperature for the Tc test point.

For LEDs it is the junction temperature that is the critical factor for operation and lifetime. Since there is a direct relation between the case temperature and the LED junction temperature, it is suuficient to measure the temperature at the Tc point of the LED module only.
This Tc point must not exceed the maximum values stated in the associated datasheet in the download section on www.philips.com/oem.

How to... Measure Tc at the Tc point

The Tc test point for each LED module is indicated both on the PCB and in the associated datasheet on www.philips.com/oem.

The temperature can be measured using for example a thermocouple that is firmly glued or taped to the upper surface of the LED module. For a representative measurement, the temperature must be stable before any reliable data can be obtained (often minimum 1 hour stabilizing time).

Relation between Tc and flux

The flux of the LED module is specified at a nominal Tc, which is a lower value than the maximum Tc corresponding to the lifetime specification. Increasing the Tc temperature has an adverse effect on the flux and lifetime of the LED module.

Relation between Tc and ambient temperature

The Tc increases by approximation proportionally with the ambient temperature (Tamb). The temperature offset between Tamb and Tc depends on the thermal design of the luminaire. The Philips LED Linear system has been designed for indoor use. For approved ambient temperature range please check the associated LED module datasheet on www.philips.com/oem.

How to... Tune for anticipated ambient temperature (˚C)

The LED module specifications are provided under nominal conditions, like nominal flux at nominal Tc. It is possible to deviate from the LED module's nominal Tc. This gives you the flexibility to operate your luminaire at a higher Tamb or to use the housing material you prefer. A deviation of Tc from the nominal value, will lead to relatively small changes in flux (lm) and efficacy (lm/W). The next table explains the impact and boundaries.

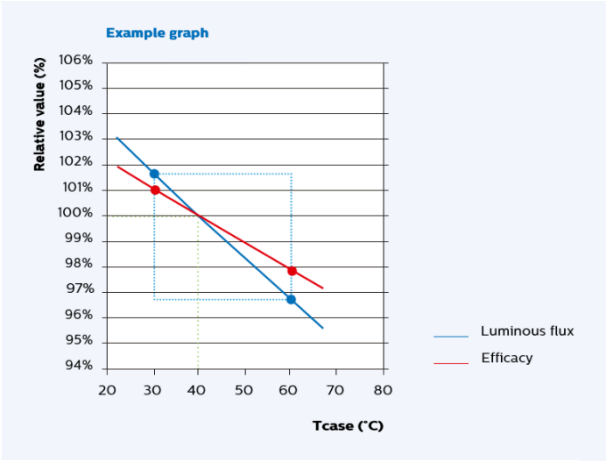

Example of flux and efficacy at different Tc.
For specific details please check the associated datasheet of the LED module you are using.

Example

For a given LED Linear module, keeping the drive current constant,

- allow doubling of Tc (°C).
- costs only about 5% flux.
- and costs only about 3% efficacy (lm/W).

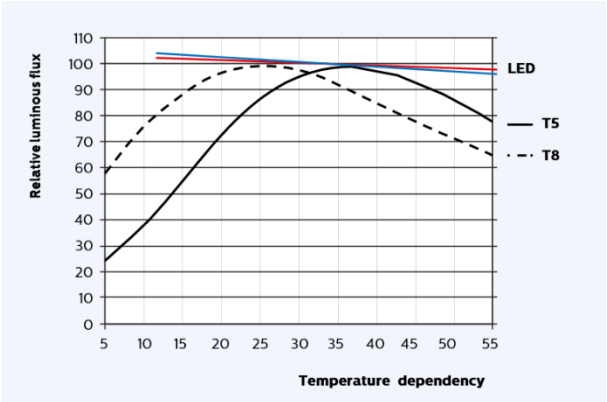

With LED there is a stable light performance over a large temperature range, opposed to fluorescent tubes.

Important

In case the OEM chooses to allow the temperature at Tc other than nominal, the lifetime and reliability of the LED module must be taken into account. Given a constant drive current (mA), following temperature regions can be distinguished:

1. **Temperature at Tc < nominal value (°C)**
   a. Efficacy (lm/W) higher than nominal value.
   Light output (lm) higher than nominal value.
   b. Lifetime > 50,000 hours.
2. **Temperature at Tc between nominal value and lifetime value (°C)**
   a. Efficacy (lm/W) lower than nominal value.
   Light output (lm) lower than nominal value.
   b. Lifetime > 50,000 hours.
3. **Temperature at Tc between lifetime value and absolute maximum value (°C)**
   a. Efficacy (lm/W) lower than nominal value.
   Light output (lm) lower than nominal value.
   b. Lifetime < 50,000 hours.
4. **Temperature at Tc > absolute maximum value:** do not exceed the absolute maximum value as this can lead to LED module failure.

Tc has a relatively small impact on performance but a large impact on lifetime. We advise to stay below Tc-life.

The values for Tc nominal, Tc life, and Tc max are defined in the datasheet of the module of concern. An example is given below. Datasheets can be found on:
www.philips.com/oem.

Fortimo LED Linear module	Tc nominal *	Tc life**	Tc max***
	°C	°C	°C
LED module example	45	55	65

Notes:
* Nominal Tc at which performance is specified
** Value at which lifetime L70B50 ≥ 50,000 hour is specified
*** Maximum Tc for safety

Influence of thermal resitance of the luminaire

In case of a high flux LED Line - with a high power density - the luminaire design has to enable sufficient heat transfer from the LED module to the ambient. In other words, the higher the flux density (lm/ft), the lower the total thermal resistance (Rth) from the LED module to the ambient has to be, in order to keep the LED module temperature at the specified level. The total Rth is determined by both the LED module and the luminaire design. The lower the Rth, the better the thermal performance of the system.

In case the measured Tc value of the LED module inside the luminaire is higher than specified and the luminaire design cannot be modified, reducing the LED module's current can provide a solution.

The total Rth can be calculated from the measured difference between Tc and Tamb and the LED module's current and voltage by the following formula:

Please note: Pth is approximately 0.6 x Pelectric

$$R_{th} = \frac{(T_c - T_{amb})}{0.6 \times (V \times I)}$$

How to… Calculate Tc after changing the drive current

If Tc is known at current 'X' mA, what will Tc be if the current is set to 'Y' mA?

Alternatively:
How much higher can or lower must the current be to stay below Tc-life?

6. Given Tc and Tambient are obtained correctly in the first place.
7. Assuming linear relation with bias (being the Tambient) is realistic.
8. Once Rth is determined, it becomes:
   Tc = (Rth * V * I) + Tambient

This realistic approach is however simplified. For example, calculate Tc within few degrees Celsius from Tc-life for 40mA, based on measurement at 200 mA, can be expected very inaccurate.

Advice: for best practice and to safe-guard warranty, please do actual measurements.

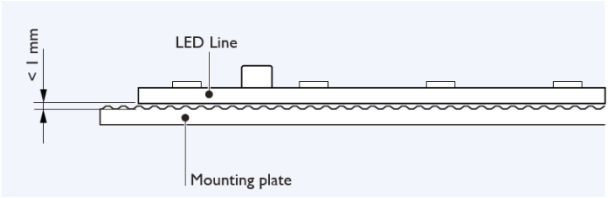

The air gap of the area where the LED module is mounted should not exceed 1 mm along the LED module

Material	k (W/mK)	Equivalent conductivity
Copper	400	1 cm thickness, could be replaced by
Aluminum	200	2 cm thickness, could be replaced by
Brass	100	4 cm thickness, could be replaced by
Steel	50	8 cm thickness, could be replaced by
Corrosion-resistant steel	15	27 cm thickness

Thermal conductivity of different materials

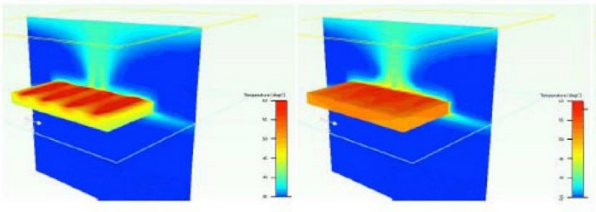

Temperature distribution using different mounting plate materials

Thermal emissivity coefficients of common materials

Material	Finish	Emissivity coefficient
Aluminum	New/polished	0.04 - 0.06
	Blank	0.20 - 0.30
	Anodized	0.80 - 0.95
Steel	New/polished	0.10
	Painted/coated	0.80 - 0.95

Cooling via the luminaire housing or cooling plate

Thermal contact

The air gap of the area where the LED module is mounted should not exceed 1 mm along the LED module's length to ensure good thermal contact and to avoid local stress and strain on the LED module. The smaller the air gap, the better the thermal contact. In practice, the use of thermal paste is not needed.

Cooling via the luminaire housing

The Philips LED Linear module itself has been optimized to spread the heat generated. However, extra cooling can be achieved via the luminaire housing or, if this is not sufficient, via an extra cooling plate. The cooling plate must release its heat via the luminaire to the surroundings.
Proper thermal contacts in all interfaces along the thermal patch from module to the outer world, must be guaranteed.

Cooling surface area and material

The luminaire housing plays an important part in the thermal performance of your product.

If the luminaire housing has a good thermal conductivity, the effective cooling area is increased. It is therefore recommended to use a material that has high thermal conductivity and is of sufficient thickness. This will lower the Tc of the module and enable the system to perform better (lifetime and flux). The required size of the luminaire housing depends on the generated heat, the design and volume of the luminaire, the thermal properties of the material used and the expected ambient temperature.

Aluminium is preferred over steel because of its higher thermal conductivity, although for most applications steel is likely to be adequate for ambient temperatures of up to about 40 °C. If Tc is exceeding the target value, consider the use of aluminium.

The examples on the left show that the heat is transferred in a correct way.

Thermal radiation and emissivity coefficient

Thermal radiation accounts for a substantial part of the total heat transfer. The amount of thermal radiation is highly dependent on the emissivity coefficient of the surface. For example, a polished aluminum surface has a very low emissivity coefficient, while a painted surface has a very high one. A higher emissivity coefficient means more effective heat transfer.

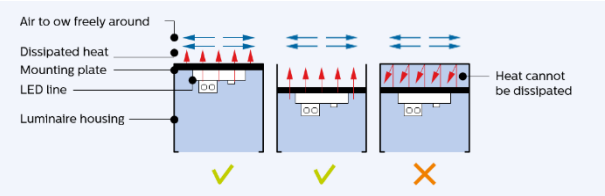

Tips for small volume and double chamber conditions

The heat produced by the LED modules and driver in the luminaire (or similar housing) must be dissipated to the surroundings. If a luminaire is thermally isolated by a ceiling, wall or insulation blanket, the heat produced cannot be easily dissipated. This will result in a higher temperature of the driver and LED modules, which will have an adverse effect on system performance and lifetime. For optimum performance and lifetime, it is advised that air be allowed to flow freely around the luminaire and that the mounting plate is in direct thermal contact with free air. Designing the luminaire in such a way that air can also flow through it will provide extra cooling, which may be beneficial in certain cases.

How to... Design for good thermal performance

General thermal design guidelines to improve the thermal management and performance of a luminaire:

- Ensure good thermal contact between the module/ driver and the coldest part of the luminaire.
- Simplify the heat path from Tc to cold ambient air; fewer interfaces is better.
- Place the module(s) and driver at a distance from each other to obtain a more uniform temperature distribution in the luminaire.
- Avoid sharp folding or bending of metal plate-parts.
- Use good thermally conductive materials in the primary heat path.
- Ensure proper heat spreading by using materials with good conductivity and/or sufficient thickness to increase the effective cooling surfaces.
- Anodized, painted surfaces are preferable to blank shiny surfaces in order to increase heat transfer via thermal radiation.
- Use of thermal interface materials (TIM) can be considered to improve thermal contact, i.e. between the LED module and luminaire housing.

Contact Philips at any time if you need advice on your luminaire design (see section entitled ‘Contact details’).

Reliability

Impact of thermal cycling on product failure

Not only the drive current (mA) and steady state case temperature (Tc °C) have an impact on the lifetime of LEDs. Also the number of full thermal cycles has a significant impact on product failure. A full thermal product cycle means the complete warm up to stabilized Tc of the product in use and full cool down to ambient temperature (Tamb) of the product being switched off.
Electrically faster switching, thereby not reaching the thermal limits of a full thermal cycle, will allow for higher numbers. Note: always take the Tc temperature limits into account as stated in the datasheet of the LED module you use.

Lumen maintenance of the Philips LED Linear modules

B50L70 @ 50,000 hours

The quality of the Led Linear portfolio is underpinned with Philips' claim of B50L70 @ 50,000 hours. This means that at 50,000 hours of operation at least 50% of the LEDs' population will emit at least 70% of its original flux. In this section the example graphs show the estimated lumen depreciation curves for different percentage of the population and for different Tc temperatures. The actual data for the LED Linear modules can be found in the associated datasheets.

These estimations are based on 9,000 hours of LM80 testing and calculated according to the TM-21 guideline. After 50,000 hours the lines are dotted, because officially lumen maintenance beyond 50,000 hours cannot be predicted. Lowering the drive current and or temperature will increase the lumen maintenance time.

Please refer to the associated LED module datasheet for the specific graphs on
www.philips.com/oem.

Lumen maintenance for B10 and B50

Lumen maintenance values can be found in the datasheets. An example of a lumen maintenance table is shown below. The data are based on LM80 data.

Lumen maintenance

Operation point	Lumen maintenance	L70			L80			L90		
	x 1000 hours	B50	B20	B10	B50	B20	B10	B50	B20	B10
80% I nom 192 mA	Tc 25°C	>70	>70	>70	>70	>70	>70	67	64	62
	Tc nom 45°C	>70	>70	>70	>70	>70	>70	52	50	49
	Tc life 70°C	>70	>70	>70	>70	>70	>70	40	38	37
I nom 240 mA	Tc 25°C	>70	>70	>70	>70	>70	>70	67	64	62
	Tc nom 45°C	>70	>70	>70	>70	>70	>70	52	50	49
	Tc life 70°C	>70	>70	>70	>70	>70	>70	40	38	37
I life 480 mA	Tc 25°C	>70	>70	>70	>70	>70	>70	58	55	54
	Tc nom 45°C	>70	>70	>70	>70	>70	>70	45	43	42
	Tc life 70°C	>70	>70	>70	>70	>70	>70	35	33	32

The L70B50 value is the number of hours after which 50% of the population emits at least 70% of the initial flux. The L80B10 is the number of hours after which 90% of the population emits ate least 80% of the initial flux.

Fuse on Linear LED modules

What is a fuse?

A fuse is a small electric component that conducts the current under normal conditions, but breaks/interrupts the current when it exceeds a certain limit. In this way potentially unsafe conditions are avoided.

Why adding a fuse?

When several LED modules are combined in parallel into one luminaire, the strings of the modules are electrically connected in parallel. When LED strings start to fail or there is wiring fault, the driver current is flowing through the reduced number of strings, resulting in an increased string current, which can lead to overheating of the LED module. When the fuse is applied to the LED module, the fuse will blow after the failure indicated with the diamond in above graph below, and an unsafe situation is prevented.

Note that latest modules do not have a fuse, since they are designed in such a way, that a fuse is no longer needed.



Example of a fuse mounted on a LED module

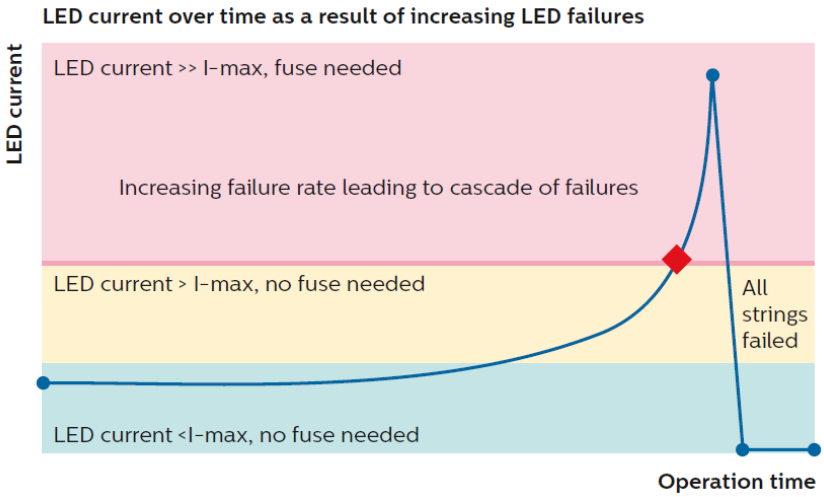

Situation with fuses

Example below: Wire failure in a chain of four low voltage LED modules onto one driver. A similar situation would be when assembling multiple chains of high voltage LED modules in parallel.
The fuse protects mainly against two failure mechanisms

5. Wire failure (sudden disconnection of many LED strings).
6. End of life conditions (cascade of failing LEDs)

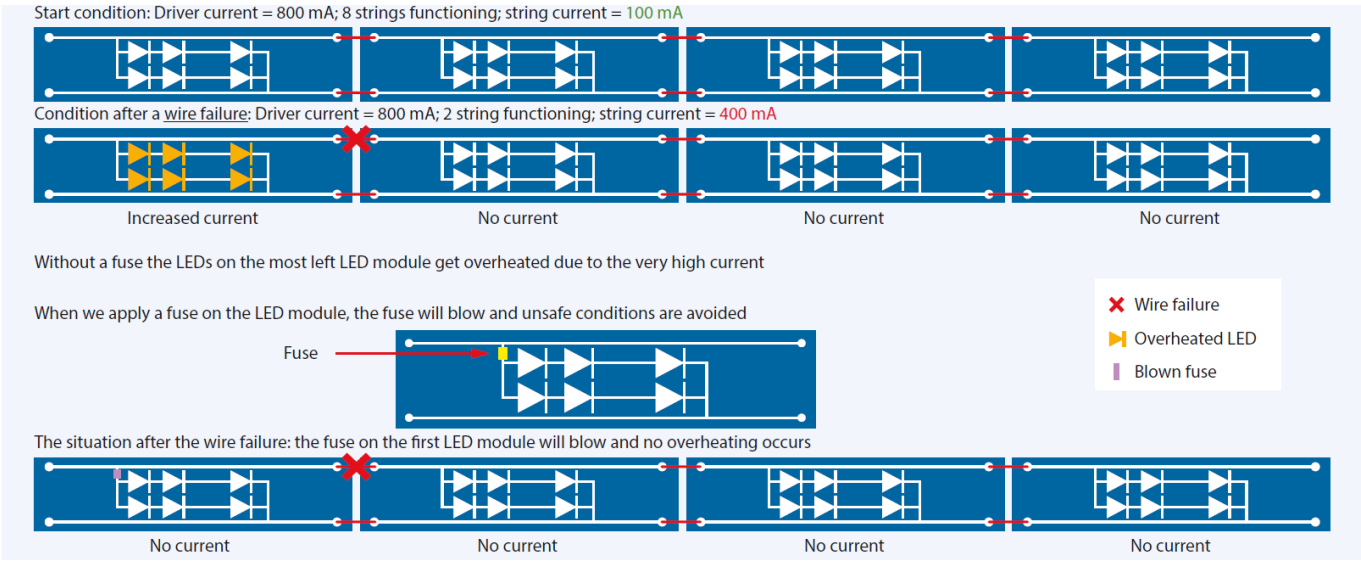

SiDAC

Instead of a fuse, a SiDAC (Silicon Diode for Alternating Current) can be used to protect the module for overcurrents. A SiDAC will be damaged if the the plus and minus connection of a module are reversed. Therefore:
Take care of proper connection during luminaire assembly.



Example of a SiDAC mounted on a LED module

Human Centric Lighting solutions

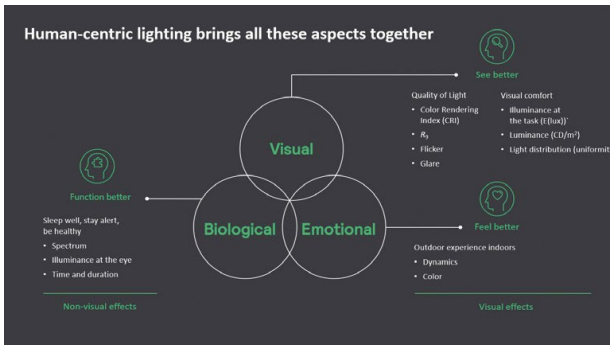



FlexTune modules

Light is not only a means to make our world visible. It influences the biological and emotional processes in human beings as well. The figure below explains the effect of these three aspects.

Signify offers several Human Centric Lighting solutions. The Quality of Light and Visual Comfort has been included in our portfolio for years. Nowadays, we also offer systems that improve biological and emotional functions.

FlexTune

FlexTune is the name of our Tuneable White Systems. We offer both modules and drivers allowing you to compose the system that meets your requirements.

More design-in information can be found in the Design-in Guide SR drivers:
DiG SR Drivers
and in the FlexTune Quick Installation Guide:
QiG FlexTiune

Cyan Enhanced Spectra

We created an two series of LED-modules with a spectrum that stimulates the biological effects on the circadian rhythm of natural light whilst still providing comfortable light of high quality. The modules are available in single CCT and Tuneable White versions.

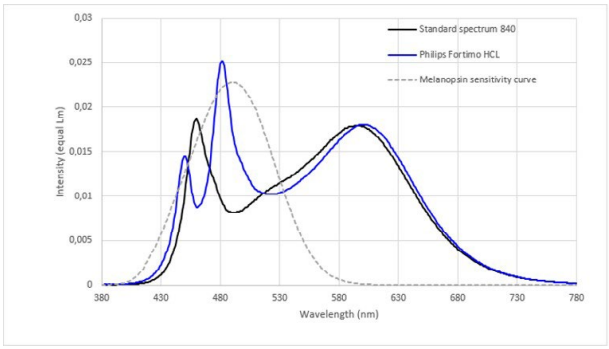

Spectrum Fortimo LED Strip CES



Fortimo LED Strip CES 1ft 1100lm 840 HV5

Tips for assembly and installation

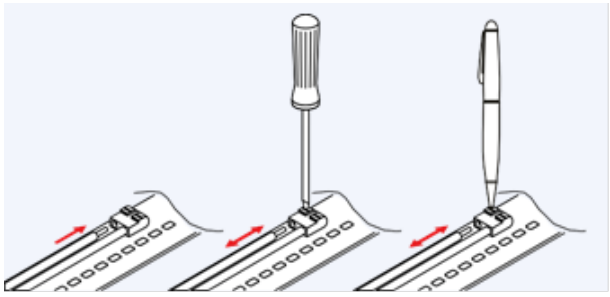

Inserting solid conductor via push-in termination

Insert/Remove the stranded conductor by lightly pushing on push button, e.g. using a tool or e.g. a ball point (pen)

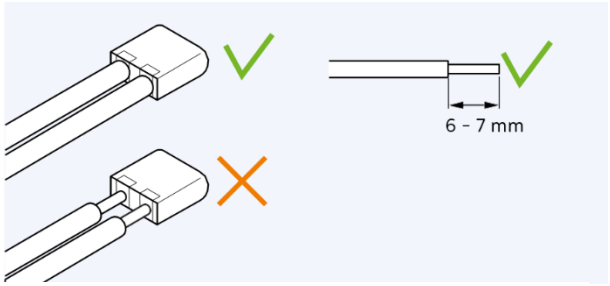

Wire insertion and strip length, the 6-7mm is an example. Values are specified in the datasheets.

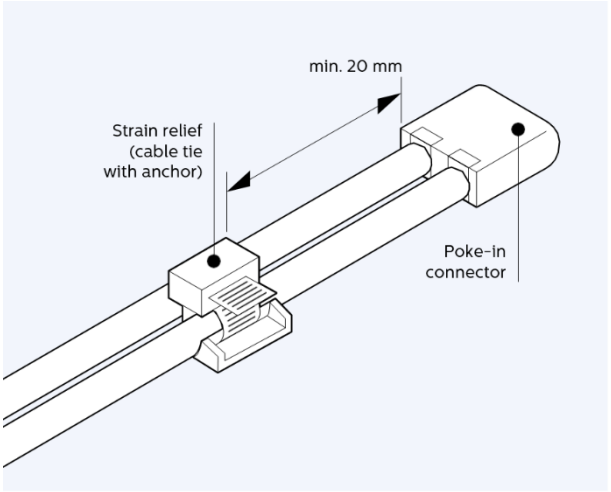

Strain relief

Warning

- The contacts and housings are not repairable.
- DO NOT use damaged or defective contacts or housings.
- Do not apply mains power directly to a LED Linear module!
- Do not touch, attach or detach LED modules in a live system.

Warning

Do not service the system when the mains voltage is connected. This includes connecting or disconnecting the cable.

Inserting and removing the cables

Conductor insertion and release
All wires must be pushed firmly into the contact wire opening. The wire can be released by pushing the release button.

Wire insulation

The wires must be fully inserted such that the wire insulation is inserted into and surrounded by the end of the housing (no bare wire should be visible).

Wire termination depth

The required wire termination depth on the LED module connector is achieved when the wire, with stripped insulation (by hand or machine) to the indicated length stated in the LED module datasheet, ensures a solid connection. For the driver connector the required wire termination depth is stated in the driver datasheet. Check both LED module and driver datasheets for information on www.philips.com/oem.

Strain relief

It is important to add a strain relief to the wiring of the connector from driver to LED Linear module and consider this from LED module to LED module when the length of the cable is more than 15 cm.

Binning

In order to provide a high-quality LED light product at economical attractive price Philips has created high quality LED light by ensuring correct mixing of the LED bins within each LED module. For selected LED Linear modules there are not one, but two two bins, based on forward voltage (Vf) only. Philips LED Linear does not require bins on flux nor color, which is convenient for stock keeping and assembly. Please check the datasheet of the LED module you use if one or two bins apply.

Note:
For light quality reasons do not mix different bins in one LED Linear system (system being modules on one driver). Luminaires from different bins, but having the same bin within one system (e.g. luminaire), will perform similar on color and lumen. Meaning luminaire X with bin ‘A’ will appear equal to luminaire Y with bin ‘C’.

Why address the issue of LED binning

It is important to understand binning because it is very important in LED system design. As in other semiconductor manufacturing processes, in the production of LEDs the number of parameters of the epitaxy process is very large and the process window is small (for example, the temperature must be controlled to within 0.5 °C across the wafer at temperatures of ~800 °C). The fact that it is difficult to achieve such a high degree of control means that the properties of the LEDs may vary significantly within single production runs and even on the same wafer.
To obtain consistency for a given application, binning (= selection in bins, groups of components like LEDs with similar specifications) is mandatory. Binning involves characterizing the LEDs on the basis of measurement and subsequently categorizing them into several specific bins. To keep the cost per LED down, LED manufacturers need to sell the full production distribution. At the same time they cannot guarantee the availability of all bins at all times. There is a trade-off between logistics and cost price on the one hand, and the application requirements on the other. The advantage of binning is that there will only be a limited need for LED module pairing by the OEM. In the near future Philips might omit the offering of bins, having only one bin per module type.

Maximum voltage printed on product differs from the value than in the datasheet

On the product we print maximum voltage for approbation under worst possible conditions (lowest temperature, maximum current, high Vf bins). In the datasheet we specify voltage under nominal conditions (nominal current and temperature) in a tight range which product is expected to achieve. Therefore these two Vmax values are different in practice.

ElectroStatic Discharge (ESD)

Introduction to ESD

It is generally recognized that ElectroStatic Discharge (ESD) can damage electronic components, like LED chips, resulting in early failures. Professional users of electronic components are used to implement extensive and disciplined measures to avoid ESD damage in their finished end products. Now, with the introduction of LED electronic components for lighting a new breed of users, such as OEMs and installers, are exposed to handling and manufacturing with LED electronic components.

ESD requirement links to product specification

Philips designed its LED Linear products rather robust against ESD. In our LED-packages, a Zener Diode (or TVS) is used to protect the LED-chip. Note that some Certaflux modules are not protected with a TVS. For these products, the guidelines in this section are even more relevant. Specifications of the LED Linear module's maximum contact discharge level and air discharge level, according to IEC 61000-4-2 (150pF/330Ω), are stated in the associated datasheets of the LED module you use, on:
www.philips.com/oem.

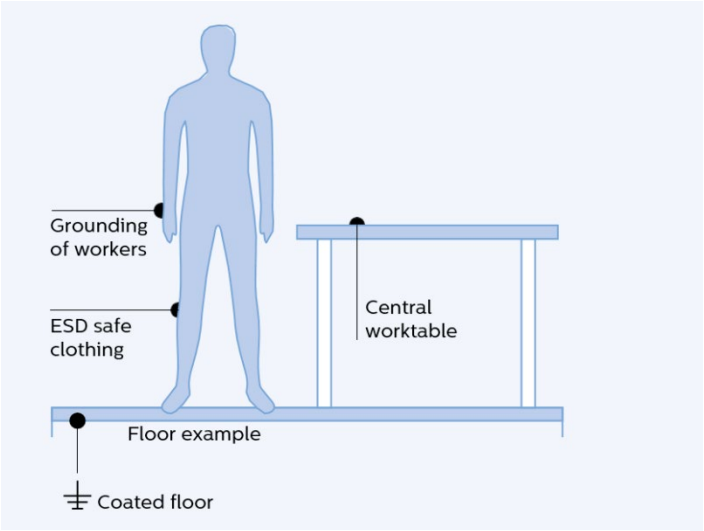

Example of ESD measures, which could contain wrist bands, ESD-safe shoes and floor, ESD friendly materials and ESD-control plan general awareness

How to… Meet the ESD requirement

Advice is to make use of ESD consultancy to determine how the ESD requirement can be met. One should think of an ESD control plan and ESD adequate equipment. Independent ESD consultancy companies can advise and supply adequate tools and protection guidance. For example Philips Innovation Services can provide that consultancy. More information can be found in the section entitled 'Contact details'.

Servicing and installing luminaires

It is highly recommended that Installers are informed that they should not touch the LED components and should use earthed arm-straps to avoid ESD damage during installation and maintenance.

Controllability



EasyAir SNS210 MC sensor and wireless node



EasyAir SNH200 MC Industry Sensor

Dimming

The Philips Fortimo LED Linear systems are complemented with a range of Xitanium drivers. These drivers are available in various dimming protocols:

- TouchDim & DALI protocol
- 1-10 V dim protocol
- Non-dimmable (Fixed Output) drivers

Please refer to the Xitanium Indoor Linear LED driver Design-In Guide in the download section on www.philips.com/oem for detailed information.

Connected Lighting Systems - MC

Use our Sensor Ready drivers combined with our EasyAir sensors, to create a connected lighting system. These systems allow you to create systems with wireless control, ranging from very simple, local systems to large systems that can be integrated into Building Management Systems.

Visit www.philips.com/oem to find out more about our entire portfolio of control products. Design in Guides are available there as well.

Quality, compliance, and approval

Energy efficiency labelling

From September 2021 on, in Europe the Single Lighting Regulation (SLR), and Energy Labelling Regulation (ERL), apply. Whereas the SLR sets product-specific performance requirements for energy-using and energy-related products, the ELR lists the labelling requirements for selling those products on the EU market.

The Philips LED Linear product family is in accordance with these regulations. The individual labelling of each product on which this statement is applicable can be found in the Performance Characteristics for Philips LED Linear systems in the download section on: www.philips.com/oem

Chemical compatibility

In the current market medium power LEDs exist, containing a silver-finished (Ag) Lead frame. The lead frame finish is sensitive to pollution and or corrosion when exposed to certain chemical compounds. Examples are substances containing Sulfur or Chlorine. In that case parts of the lead frame may blacken, which will impair the lumen output or the color point of the LED light. Materials that are known to have a higher risk to be a source of Sulfur and Chlorine are for example natura l rubbers used for cables, cable entries or sealing, or corrugated carton. Also be careful using adhesives, cleaning agents, coatings and applications in aggressive (corrosive) environments.

We recommend ensuring that the direct environment of these LEDs in the luminaire does not contain materials that can be a source of Sulfur or Chlorine, for optimal reliability of the LED, LED module and/or LED luminaire.
Furthermore, make sure that the products with these LEDs are not stored or used in vicinity of sources of Sulfur or Chlorine, and the production environment is also free of these materials. Also avoid cleaning of the LED products with these types of LEDs with abrasive substances, brushes or organic solvents like Acetone and TCE.

Applications of the product in industry and heavy traffic environment should be avoided in case of risk of ingress of Sulfur and Chlorine from the environment

The Philips LED Linear family makes use of LEDs with above explained type of lead frame. Therefore, above recommendations apply for the Philips LED Linear modules. Philips LED Linear systems comply with the standards shown in below paragraphs.

Chemical Name	Normally used as
Acetic acid	Acid
Hydrochloric acid	Acid
Nitric acid	Acid
Sulfuric acid	Acid
Ammonia	Alkali
Potassium hydroxide	Alkali
Sodium hydroxide	Alkali
Acetone	Solvent
Benzene	Solvent
Dichloromethane	Solvent
Gasoline	Solvent
MEK (Methyl Ethly Ketone)	Solvent
MIBK (Methyl Isobutyl Ketone)	Solvent
Mineral spirits (turpentine)	Solvent
Tetracholorometane	Solvent
Toluene	Solvent
Xylene	Solvent
Castor oil	Oil
Lard	Oil
Linseed oil	Oil
Petroleum	Oil
Silicone oil	Oil
Halogenated hydrocarbons	
(containing F,Cl,Br elements)	Misc
Rosin flux	Solder flux
Acrylic tape	Adhesive
Cyanoacrylate	Adhesive



A list of chemicals, often found in electronics and construction materials for luminaires that should be avoided, is provided in the table on the lrft. Note that Philips does not warrant that this list is exhaustive since it is impossible to determine all chemicals that may affect LED performance. These chemicals may not be directly used in the final products but some of them may be used in intermediate manufacturing steps (e.g. cleaning agents). Consequently, trace amounts of these chemicals may remain on (sub) components, such as heat sinks. It is recommended to take precautions when designing your application.

In case of questions on compatibility of materials or applications of the product please contact your Philips representative for application support.

Compliance and approval marks

The Philips LED Linear family is ENEC approved and comply with CE regulations. The relevant standards are summarized at the end of this chapter. To ensure luminaire approval, the conditions of acceptance need to be fulfilled. Details can be requested from your local sales representative. All luminaire manufacturers are advised to conform to the international standards of luminaire design (IEC 60598-Luminaires).

Ingress Protection – IP rating, humidity, and condensation

he Philips LED Linear systems are build-in systems and therefore have no IP classification. They are not designed for operation in the open air. The OEM is responsible for proper IP classification and approbation of the luminaire. The Philips LED Linear modules have been developed and released for use in damp locations and not for locations where condensation is present. If there is a possibility that condensation could occur on the modules, the system/ luminaire builder must take precautions to prevent this.

Photobiological safety

The lamp standard, IEC 62471 ‘Photobiological safety of lamps and lamp systems’ gives guidance on evaluating the photobiological safety of lamps and lamp systems, including luminaires. It specifically defines the exposure limits, reference measurement technique, and classification scheme for the evaluation and control of photobiological hazards from all electrically powered incoherent broadband sources of optical radiation, including LEDs, in the wavelength range from 200 nm to 3000 nm. Example measurement results for LED Linear products are given below. Based on these measurements, conclusion is usually that no safety measures are required. This conclusion (verdict) is added to each datasheet.

Item	Result: Risk group
Actinic UV	Exempt
Near-UV	Exempt
Retinal Blue Light	Exempt
Retinal Blue SmallScr	Exempt
Retinal thermal	Exempt
Infrared Eye	Exempt

Please refer to the datasheet of the module you use.

Blue Light Hazard

From the nature of most LEDs applying blue light, emphasizes has been put on the hazard in terms of Photo Biological Safety (PBS). Evaluation by the European lighting industry (ELC, Celma) has concluded LED light sources are safe for customers when used as intended.
Nevertheless luminaire makers have to comply with Luminaire standards including PBS. To avoid extensive retesting, the market prefers to build on the test conclusions of the LED (module) suppliers. The testing conclusion then will be expressed in Risk Groups (RG), where RG0 and RG1 do not require marking and/or specific action for the OEM (as compared to RG2 and 3). The Certificates with the verdict of the LED products can be found in the download section of our website: www.philips.com/oem

Some facts on blue light

- All light – visible, IR, UV – causes fading.
- It has long been known that blue light causes fading in yellow pigments.
- LEDs do not produce more blue light than other sources by its nature.
- Blue light content is relative to color temperature, not to light source.

“Often, investigations into the effect of short-wavelength radiation—be it on humans or artwork—suggest that LEDs are dangerous because they emit more blue light than other sources like incandescent bulbs or CFLs. While it is true that most LED products that emit white light include a blue LED pump, the proportion of blue light in the spectrum is not significantly higher for LEDs than it is for any other light source at the same correlated color temperature (CCT).”

For more details follow this link:
https://www.minenergia.gov.co/documents/10180/667537/opticalsafety_fact-sheet.pdf

System disposal

We recommend that the Philips LED Linear modules and its components are disposed of in an appropriate way at the end of their (economic) lifetime. The modules are in effect normal pieces of electronic equipment containing components that are currently not considered to be harmful to the environment. We therefore recommend that these parts are disposed of as normal electronic waste, in accordance with local regulations.

Relevant Standards

CE, ENEC, and ENEC+

The Philips LED Linear modules carry ENEC and ENEC+, recognized by the corresponding marking on each LED module. Next to that we publish relevant certificates (partly) in the download section on:
www.philips.com/oem

Safety

IEC/EN 62031
LED modules for general lighting- safety specifications.
IEC 62471
Photobiological safety of lamps and lamp systems.

Philips indoor Linear LED driver

IEC/EN 61347-1
Lamp control gear

Electromagnetic compatibility (tested with LED Linear modules, cables and Philips indoor L inear LED driver)

EN 55015, CISPR 55015
Limits and methods of measurement of radio disturbance, characteristics of electrical lighting and similar equipment.
IEC/EN 61000-3-2
Limits for harmonic current emissions (equipment input current <16 A per phase).
IEC/EN 61547
Equipment for general lighting purposes - EMC immunity requirements.

Environmental

The product is compliant with European Directive 2002/95/EC of January 2003 on Restriction of the Use of Certain Hazardous Substances in Electrical and Electronic Equipment (RoHS).

Contact details and suggested suppliers

Philips LED Linear systems

www.philips.com/oem
Or contact your local Philips sales representative.

The following are suggestions of products that can be used with the Philips LED Linear system. Reference to these products does not constitute their endorsement by Philips. Philips makes no warranties regarding these products and assumes no legal liability or responsibility for loss or damage resulting from the use of the information herein.

ESD-related material and tool suppliers

Amcatron Technology Co Ltd	www.amcatron.com
Botron Company Inc.	www.botron.com
Desco	www.desco.com
Static Solutions Inc.	www.staticsolutions.com

Appendix

Appendix A

840	W	mm	ft	lm	lm/ft	lm/W	Tcold
TL5 HE	14	549	2.0	1350	691	96	@35 °C
TL5 HE	21	849	3.0	2100	695	100	@35 °C
TL5 HE	28	1149	4.1	2900	709	104	@35 °C
TL5 HE	35	1449	5.2	3650	708	104	@35 °C
TL5 HO	24	549	2.0	1950	998	89	@35 °C
TL5 HO	39	849	3.0	3500	1158	92	@35 °C
TL5 HO	54	1149	4.1	5000	1223	93	@35 °C
TL5 HO	49	1449	5.2	4900	950	99	@35 °C
TL5 HO	80	1449	5.2	7000	1357	88	@35 °C
TL8	14	375	1.3	860	644	61	@25 °C
TL8	15	437	1.6	1000	643	67	@25 °C
TL8	18	590	2.1	1350	643	75	@25 °C
TL8	30	895	3.2	2400	754	80	@25 °C
TL8	23	970	3.5	2050	594	89	@25 °C
TL8	36	970	3.5	3100	898	86	@25 °C
TL8	38	1047	3.7	3350	899	88	@25 °C
TL8	36	1199	4.3	3350	785	93	@25 °C
TL8	58	1500	5.3	5200	974	90	@25 °C
TL8	70	1764	6.3	6200	988	89	@25 °C
PL-L	18	220	0.8	1200	1533	75	@25 °C
PL-L	24	315	1.1	1800	1606	82	@25 °C
PL-L	36	410	1.5	2900	1988	90	@25 °C
PL-L	40	535	1.9	3500	1838	87	@25 °C
PL-L	55	535	1.9	4800	2521	87	@25 °C
PL-L	80	565	2.0	6000	2984	75	@25 °C

Data gathered from Philips datasheets, available on several websites

Appendix B: Example wiring schematics

LV scenario	4x Fortimo LED Line 1ft 650lm 840 3R LV2	Spec fits driver window? Xitanium 36W isolated driver
Idrive = Itune x # boards	Idrive = 0.190 A x 4 = 0.760 A. Rset2 = 2100 Ω	Iout = 0.3..1.05 A = ok
Vdrive = Vf	Vdrive = 32 V	Vout = 27..54 V = ok
Power = Idrive x Vdrive	Power = 24 W (@3350 lm & 138 lm/W)	Pout = 11..36W = ok

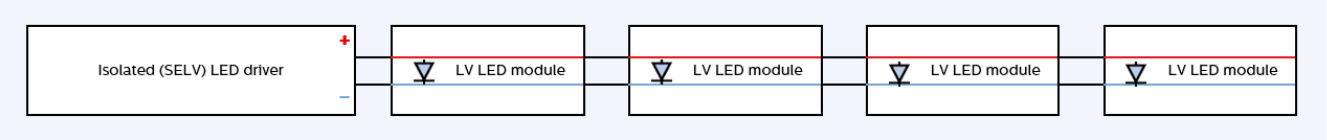

Example:4 pcs of Fortimo LED Line 1ft 650lm 3R LV2 modules.

HV scenario	2x Fortimo LED Strip 2ft 2200 lm 840 HV2	Spec fits driver window? Xitanium 35 W non-isolated driver
Idrive = Itune	Idrive = 0.221 A. Rset2 = 374 Ω	Iout = 0.08..0.35 A = ok
Vdrive = Vf x # modules	Vdrive = 46 V x 2 = 92 V	Vout = 50..220 V = ok
Power = Idrive x Vdrive	Power = 20 W (@3350 lm & 166 lm/W)	Pout = 10..35 W = ok

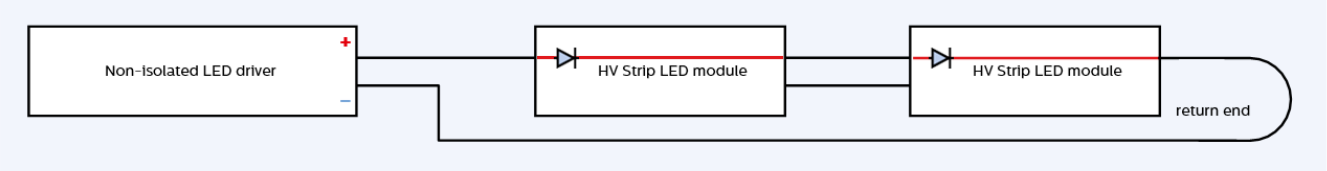

Example: 2 pcs of Fortimo LED Strip 2ft 2200 lm HV modules.

Disclaimer

Signify will perform the testing of the LED systems to high standards of workmanship. The tests are carried out with reference to the EN/IEC standards, if any, which are regarded by Signify as being of major importance for the application of the lamp gear and the lamp within the fixture.

The design-in guide, regarding the testing and design in of the LED system provided by Signify, is not an official testing certificate, and cannot be regarded as a document for official release of the fixture. The OEM is liable for the official testing by a certified test body and all markings, such as CE and ENEC marks, on the fixture assembly.

The design-in guide is for information purposes only and may contain recommendations for detecting weak points in the design of the system (lamp – lamp gear – fixture), if any.

Specifically mentioned materials and/or tools from third parties are only indicative: other equivalent equipment may be used but it is recommended that you contact Signify for verification.

Signify will not be liable for unforeseen interactions of the proposed solutions when applied in the fixtures or applications using these fixtures. Signify has not investigated whether the recommendations are or will in the future be in conflict with existing patents or any other intellectual property right. Signify does not warrant that its recommendations are technically or commercially the best options.

Since the tests are only performed on one particular fixture provided by the customer, it will be treated as a prototype. This means that there is no statistical evidence regarding later production quality and performance of the lamp – lamp gear – fixture system.

As Signify does not have control over manufacturing of the fixtures, Signify cannot be held liable for the fixture assembly.

Signify will not accept claims for any damage caused by implementing the recommendations.

No warranty whatsoever may be claimed by the OEM with regard to the content and/or quality of the design-in guide or any other advice, or the conclusions and/or recommendations in the design-in guide or any other document, either express or implied, and Signify expressly disclaims any implied warranties of any kind, including without limitation any warranties of satisfactory quality, fitness for a particular purpose or non-infringement and any warranties regarding the design-in guide or any other advice or the use of the results of any activity performed while testing the fixture with respect to its correctness, quality, accuracy, completeness, reliability, performance or otherwise.

The OEM expressly agrees that test design-in guides are provided by Signify on an ‘as is’ basis and an ‘as available’ basis at customer’s sole risk and expense. Signify shall not be liable for any lost profits or lost savings, indirect, incidental, punitive, special, or consequential damages whether or not such damages are based on tort, warranty, contract, or any other legal theory – even if Signify has been advised, or is aware, of the possibility of such damages.

The OEM must bring any claim for damages within ninety (90) days of the day of the event giving rise to any such claim, and all lawsuits relative to any such claim.



©2022 Signify Holding. All rights reserved.

Note that the information provided in this document is subject to change. This document is not an official testing certificate and cannot be used or construed as a document authorizing or otherwise supporting an official release of a luminaire. The user of this document remains at all times liable and responsible for any and all required testing and approbation prior to the manufacture and sale of any luminaire. This includes (without limiting the aforesaid), ensuring that interruptions or short circuits in the electrical circuit do not occur and if so, the system can handle it by taking preventions in the luminaire design.

The recommendations and other advice contained in this document, are provided solely for informational purposes for internal evaluation by the user of this document. Signify does not make and hereby expressly disclaims any warranties or assurances whatsoever as to the accuracy, completeness, reliability, content and/or quality of any recommendations and other advice contained in this document, whether express or implied including, without limitation, any warranties of satisfactory quality, fitness for a particular purpose or non-infringement. Signify has not investigated, and is under no obligation or duty to investigate, whether the recommendations and other advice contained in this document are, or may be, in conflict with existing patents or any other intellectual property rights. The recommendations and other advice contained herein are provided by Signify on an “as is” basis, at the user’s sole risk and expense.

Specifically mentioned products, materials and/or tools from third parties are only indicative and reference to these products, materials and/or tools does not necessarily mean they are endorsed by Signify. Signify gives no warranties regarding these and assumes no legal liability or responsibility for any loss or damage resulting from the use of the information thereto given here.

03/2022 www.philips.com/oem