PHILIPS

SmartBright Lumen & Colour Select Highbay

BY240



SmartBright Lumen & Colour Select Highbay – Trusted performance. Everyday.

The SmartBright Lumen and Colour Selectable Highbay delivers unparalleled flexibility for a wide range of applications. Colour selectable (4000K/4500K/5000K) and lumen selectable from 15K to 28K lumens in the one handy package makes this the only highbay you need for almost any application. An optional motion sensor adds strong energy saving credentials.

Benefits

- High efficacy maximum energy saving
- Robust and reliable
- Long Time, Long warranty

Applications

- Warehouses
- Distribution Centres
- General Manufacturing Centres
- Exhibition Halls
- High Ceiling Applications

Features

- High Efficiency, up to 140lm/W
- Robust design, diecast housing, IP65 & IK07
- 50,000hrs and 5yr warranty as standard
- Optional Motion Sensor & programmer
- Daylight regulation functionality (with sensor option)

Versions



BY240P G2

Dimensional drawing

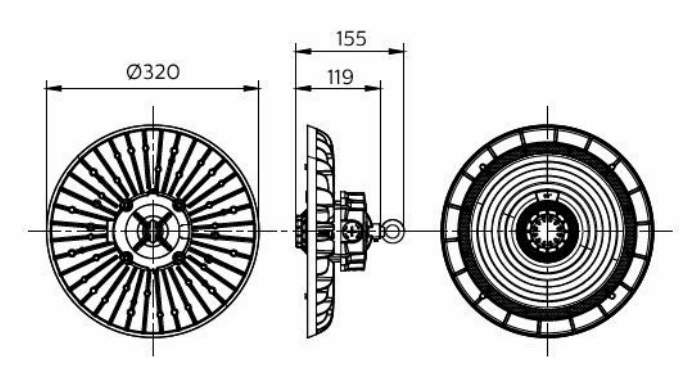

BY240P LED150_220_280S/840_50_65 WB SA

Product details



BY240P G2



BY240P G2



BY240P G2 Selector

General Information

Number of gear units	1 unit
Gear	-
Driver included	Yes

Light Technical

Beam angle of light source	92 degree(s)
Optic type	Wide beam

Operating and Electrical

Input Voltage	220 to 240 V
Suitable for random switching	Not applicable
Protection class IEC	Safety class I

Controls and Dimming

Maximum dim level	Not applicable

Mechanical and Housing

Housing Color	Black
Ingress protection code	IP65 [Dust penetration-protected, jet-proof]
Mech. impact protection code	IK07 [2 J reinforced]

Approval and Application

Glow-wire test	Temperature 650 °C, duration 30 s
Flammability mark	For mounting on normally flammable surfaces
ENEC mark	-
Ambient temperature range	-30 to +50 °C

Light Technical

Order Code	Full Product Name	Luminous Flux	Correlated Color Temperature (Nom)	Luminous Efficacy (rated) (Nom)	Color rendering index (CRI)
911401812887	BY240P 200W_100W/840_850/WB G2	28,000 lm 22,000 lm 15,000 lm	Selectable	140 lm/W	80
911401822787	BY240P LED150_220_280S/840_50_65 WB GC	28,000 lm 15,000 lm	4000 K 5000 K 6500 K	155 lm/W 140 lm/W	≥80
911401856687	BY240P LED150_220_280S/840_50_65 WB EM	28,000 lm 15,000 lm	4000 K 5000 K 6500 K	155 lm/W 140 lm/W	≥80
911401856787	BY240P LED150_220_280S/840_50_65 WB SA	28,000 lm 15,000 lm	4000 K 5000 K 6500 K	155 lm/W 140 lm/W	≥80

Operating and Electrical

Order Code	Full Product Name	Line Frequency	Power Consumption
911401812887	BY240P 200W_100W/840_850/WB G2	50 to 60 Hz	200 W 150 W 100 W
911401822787	BY240P LED150_220_280S/840_50_65 WB GC	50 or 60 Hz	195 W 100 W
911401856687	BY240P LED150_220_280S/840_50_65 WB EM	50 or 60 Hz	195 W 100 W
911401856787	BY240P LED150_220_280S/840_50_65 WB SA	50 or 60 Hz	195 W 100 W

Controls and Dimming

Order Code	Full Product Name	Dimmable
911401812887	BY240P 200W_100W/840_850/WB G2	-
911401822787	BY240P LED150_220_280S/840_50_65 WB GC	Step Dim
911401856687	BY240P LED150_220_280S/840_50_65 WB EM	Step Dim
911401856787	BY240P LED150_220_280S/840_50_65 WB SA	Step Dim

Mechanical and Housing

Order Code	Full Product Name	Optical cover type
911401812887	BY240P 200W_100W/840_850/WB G2	Lens
911401822787	BY240P LED150_220_280S/840_50_65 WB GC	Polycarbonate
911401856687	BY240P LED150_220_280S/840_50_65 WB EM	Polycarbonate
911401856787	BY240P LED150_220_280S/840_50_65 WB SA	Polycarbonate

Approval and Application

Order Code	Full Product Name	CE mark
911401812887	BY240P 200W_100W/840_850/WB G2	No
911401822787	BY240P LED150_220_280S/840_50_65 WB GC	Yes
911401856687	BY240P LED150_220_280S/840_50_65 WB EM	No
911401856787	BY240P LED150_220_280S/840_50_65 WB SA	No

Initial Performance (IEC Compliant)

Order Code	Full Product Name	Luminous flux tolerance	Initial chromaticity
911401812887	BY240P 200W_100W/840_850/WB G2	-10% / +10%	(0.38, 0.38) SDCM≤5
911401822787	BY240P LED150_220_280S/840_50_65 WB GC	+/-10%	(0.38, 0.38); (0.31, 0.34) SDCM≤5
911401856687	BY240P LED150_220_280S/840_50_65 WB EM	+/-10%	(0.38, 0.38); (0.31, 0.34) SDCM≤5
911401856787	BY240P LED150_220_280S/840_50_65 WB SA	+/-10%	(0.38, 0.38); (0.31, 0.34) SDCM≤5

© 2026 Signify Holding. All rights reserved. The information provided herein is subject to change, without notice. Signify does not give any representation or warranty as to the accuracy or completeness of the information included herein and shall not be liable for any action in reliance thereon. The information presented in this document is not intended as any commercial offer and does not form part of any quotation or contract, unless otherwise agreed by Signify. Philips and the Philips Shield Emblem are registered trademarks of Koninklijke Philips N.V.