PHILIPS

PAR38

IPR38E



Product Description

Pressed-glass 121 mm diameter reflector lamps of high luminous intensity

Benefits

- Produces the same useful light as conventional PAR lamps at 20% lower energy

Applications

- Can be used indoors and outdoors, or wherever blown-bulb reflector lamps would be too vulnerable
- Indoors: shops, window displays, homes, hotels, restaurants, theatres, museums, exhibitions and buildings
- Outdoors: floodlighting, advertising signs, buildings, statues, podiums, sports grounds, parks and gardens
- Can be installed outdoors without any protection, provided they are used in a watertight lampholder
- For outdoor use, a heat-resistant rubber ring must be fitted between the lamp and the lampholder

Features

- Spot versions have a stippled front reflector producing a narrow, homogeneous beam
- Flood versions have a front refractor composed of prismatic elements

Versions



LPPR IPAR38-E E27 E2751 FL

Dimensional drawing

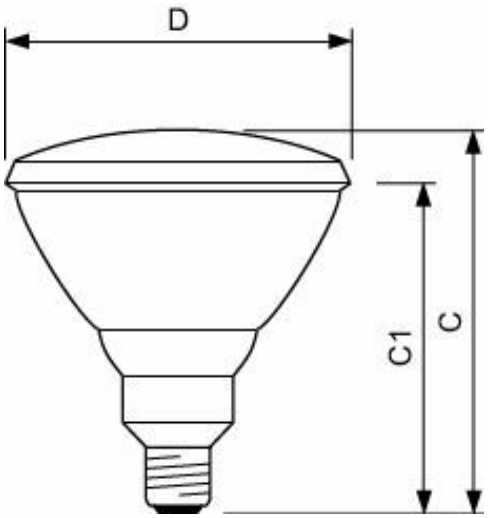

Product	D	C (max)	C1
PAR38 120W E27/51 220-240V PAR38 12D 1CT	121 mm	137 mm	123 mm
PAR38 120W E27/51 220-240V PAR38 30D 1CT	121 mm	137 mm	123 mm
PAR38 80W E27 230V PAR38 FL 30D 1CT/12	123 mm	137 mm	

General Information

Operating Position	UNIVERSAL [Any or Universal (U)]
Nominal lifetime	2,000 hour(s)
Switching Cycle	8,000
Rated Lifetime (Hours)	2,000 hour(s)

Light Technical

Luminous Flux	1,150 lm
Correlated Color Temperature (Nom)	2700 K
Color rendering index (CRI)	100

Operating and Electrical

Starting Time (Nom)	0.0 s
Warm-up time to 60% light	instant full light s

Controls and Dimming

Dimmable	Yes

Mechanical and Housing

Bulb Shape	PAR38

Approval and Application

Energy Consumption kWh/1000 h	80 kWh

General Information

Order Code	Full Product Name	Cap-Base
923810544296	PAR38 80W E27 230V PAR38 FL 30D 1CT/12	E27
923815343301	PAR38 120W E27/51 220-240V PAR38 12D 1CT	E27/51
923815643301	PAR38 120W E27/51 220-240V PAR38 30D 1CT	E27/51

Light Technical

Order Code	Full Product Name	Beam Angle (Nom)
923810544296	PAR38 80W E27 230V PAR38 FL 30D 1CT/12	30 degree(s)
923815343301	PAR38 120W E27/51 220-240V PAR38 12D 1CT	12 degree(s)
923815643301	PAR38 120W E27/51 220-240V PAR38 30D 1CT	30 degree(s)

Operating and Electrical

Order Code	Full Product Name	Power Consumption	Voltage (Nom)
923810544296	PAR38 80W E27 230V PAR38 FL 30D 1CT/12	80.0 W	230 V
923815343301	PAR38 120W E27/51 220-240V PAR38 12D 1CT	120 W	220-240 V
923815643301	PAR38 120W E27/51 220-240V PAR38 30D 1CT	120 W	220-240 V

© 2026 Signify Holding. All rights reserved. The information provided herein is subject to change, without notice. Signify does not give any representation or warranty as to the accuracy or completeness of the information included herein and shall not be liable for any action in reliance thereon. The information presented in this document is not intended as any commercial offer and does not form part of any quotation or contract, unless otherwise agreed by Signify. Philips and the Philips Shield Emblem are registered trademarks of Koninklijke Philips N.V.