PHILIPS

GreenSpace Accent Elbow GCGM

RS305B



Flexible & Affordable - Tailored for retail and hospitality

Retail & Hospitality has a clear trend that clusters of choices is one of the most important DNAs that being strongly expected in this specific applications. GreenSpace Accent Elbow is a product family with full choices in terms of optic choices, lumen diversities, control availability and wide range of tiltable angles, tailored for retail and hospitality applications.

Benefits

- Comprehensive offerings to meet various application requirements.
- Comfort lighting environment with good color quality.
- Ensured quality and reliability.

Applications

- Retail
- Hospitality
- Fashion

Features

- Multiple options of lumen output, wattage and optics.
- Full control availability including on/off, 1-10v,triac and DALI.
- Tiltable & rotatable
- CRI 90 & SDCM≤3

Versions



GreenUp Accent Elbow

Dimensional drawing

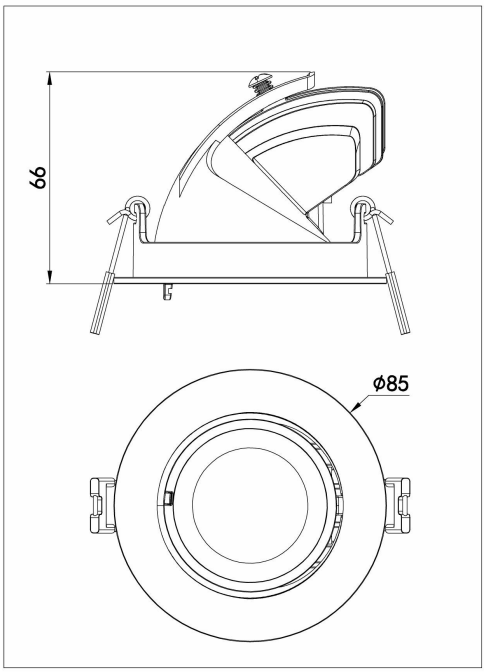

GreenUp Accent Elbow

General Information

Driver included	Yes

Light Technical

Color rendering index (CRI)	>90

Operating and Electrical

Input Voltage	200 to 240 V
Line Frequency	50 to 60 Hz
Protection class IEC	Safety class II

Mechanical and Housing

Housing Color	White
Ingress protection code	IP20 [Finger-protected]
Mech. impact protection code	IK03 [0.3 J]
Optical cover type	Acrylate

Approval and Application

CE mark	No
Ambient temperature range	-20 to +40 °C

Initial Performance (IEC Compliant)

Luminous flux tolerance	+/-10%

Light Technical

Order Code	Full Product Name	Luminous Flux	Correlated Color Temperature (Nom)	Luminous Efficacy (rated) (Nom)
911401508212	RS305B P12 940 PSD-E WB	1,030 lm	4000 K	86 lm/W
911401563502	RS305B P6 930 PSU-E VWB	590 lm	3000 K	91 lm/W
911401564102	RS305B P6 940 PSU-E MB	650 lm	4000 K	100 lm/W
911401575302	RS305B P6 930 PSD-E MB	610 lm	3000 K	93 lm/W
911401580202	RS305B P9 940 PSU-E WB	880 lm	4000 K	98 lm/W
911401580302	RS305B P9 940 PSU-E VWB	860 lm	4000 K	96 lm/W
911401596102	RS305B P12 940 PSU-E MB	1,030 lm	4000 K	86 lm/W
911401596202	RS305B P12 940 PSU-E WB	1,030 lm	4000 K	86 lm/W

Operating and Electrical

Order Code	Full Product Name	Power Consumption
911401508212	RS305B P12 940 PSD-E WB	10.8 W 13.2 W
911401563502	RS305B P6 930 PSU-E VWB	5.4 W 6.6 W
911401564102	RS305B P6 940 PSU-E MB	5.4 W 6.6 W
911401575302	RS305B P6 930 PSD-E MB	5.4 W 6.6 W
911401580202	RS305B P9 940 PSU-E WB	8.1 W 9.9 W
911401580302	RS305B P9 940 PSU-E VWB	8.1 W 9.9 W
911401596102	RS305B P12 940 PSU-E MB	10.8 W 13.2 W
911401596202	RS305B P12 940 PSU-E WB	10.8 W 13.2 W

Controls and Dimming

Order Code	Full Product Name	Dimmable
911401508212	RS305B P12 940 PSD-E WB	Yes
911401563502	RS305B P6 930 PSU-E VWB	No
911401564102	RS305B P6 940 PSU-E MB	No
911401575302	RS305B P6 930 PSD-E MB	Yes
911401580202	RS305B P9 940 PSU-E WB	No
911401580302	RS305B P9 940 PSU-E VWB	No
911401596102	RS305B P12 940 PSU-E MB	No
911401596202	RS305B P12 940 PSU-E WB	No

© 2026 Signify Holding. All rights reserved. The information provided herein is subject to change, without notice. Signify does not give any representation or warranty as to the accuracy or completeness of the information included herein and shall not be liable for any action in reliance thereon. The information presented in this document is not intended as any commercial offer and does not form part of any quotation or contract, unless otherwise agreed by Signify. Philips and the Philips Shield Emblem are registered trademarks of Koninklijke Philips N.V.