PHILIPS

GreenSpace Surface-mounted

SM29XC



Setting the standard in Surface-mounted LED Downlight

Philips GreenSpace Surface-mounted LED Downlight delivers a superior LED alternative that's up to 66% more energy efficient than the conventional downlight retrofits. Blending seamlessly into its environment, GreenSpace Surface-mounted LED Downlight mimics the form of conventional recessed downlights minus the associated high energy and maintenance costs. Phiilips GreenSpace Surface-mounted LED Downlight is also ideal for all commercial lighting applications as well as public indoor space where there is limited space in the ceiling.

Benefits

- Lumen output: Different lumens in different sizes and mounting heights with options of 1000lm, 2000lm, 3800lm & 6600lm.
- Superior light performance: Colors rendered accurately(CRI>80) and high system efficacy(100lm/w)
- Varieties: IP20, IP65 version with choice of different lumen output, and option of black housing through tailor-made
- Long lifetime: 50,000 hour lifetime ensures more savings in the long run

Applications

- Shopping mall
- Station concourse
- Canopy
- Airport public area
- Stadium public area

Features

- System efficacy: 100lm/W, energy saving up to 66% vs conventional downlights
- Reliable performance: Lifetime 50,000hours (L70B50@Ta25°C)
- Excellent light quality - CRI>=80 @3000K,4000K and 6500K
- Integral lightweight design – Installation cost is significantly reduced

Versions



GreenSpace SM IP20 3800lm



GreenSpace SM295C LED68 IP20 3800lm

Dimensional drawing

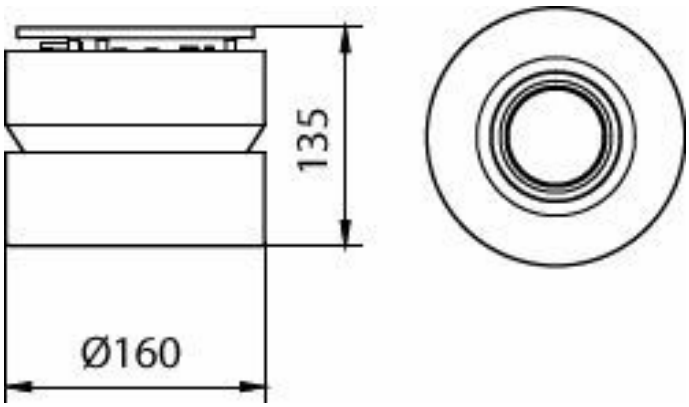

SM291C/SM293C

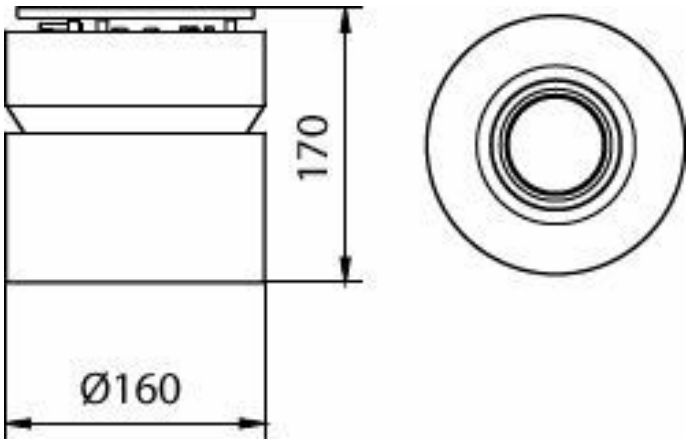

SM294C LED40

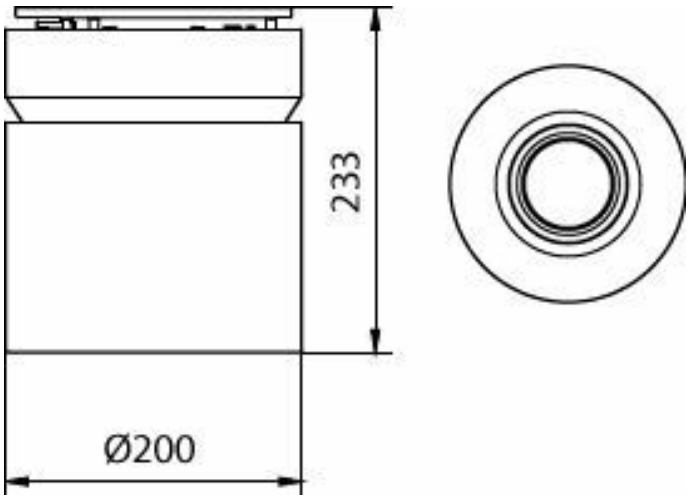

SM295C LED70

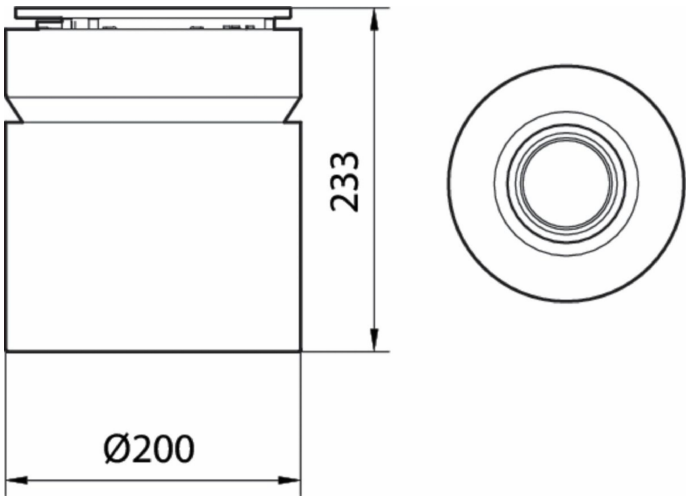

SM294C LED40

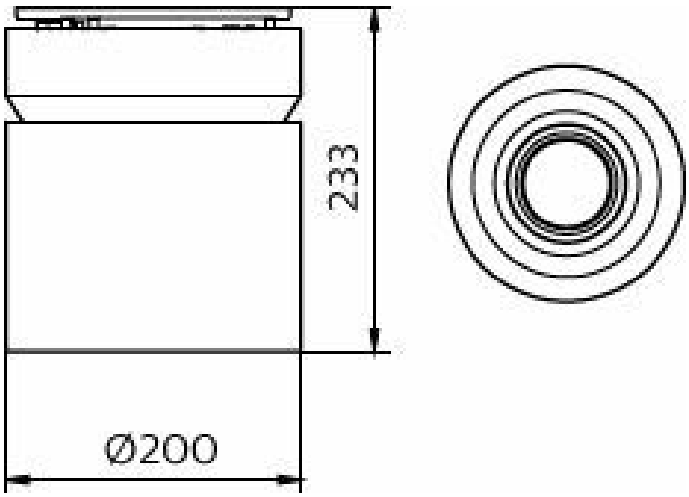

SM295C LED68

General Information

Light source replaceable	No
Number of gear units	1 unit
Driver included	Yes
Service tag	Yes

Light Technical

Color rendering index (CRI)	>80
Beam angle of light source	- degree(s)
Optic type	High-gloss mirror

Operating and Electrical

Input Voltage	220 to 240 V
Line Frequency	50 or 60 Hz
Suitable for random switching	No
Protection class IEC	Safety class I

Controls and Dimming

Dimmable	No
Maximum dim level	Not applicable

Mechanical and Housing

Mech. impact protection code	IK02 [0.2 J standard]
Optical cover type	Reflector

Approval and Application

Glow-wire test	Temperature 750 °C, duration 5 s
Flammability mark	-
CE mark	Yes
ENEC mark	-
Ambient temperature range	-20 to +40 °C

Initial Performance (IEC Compliant)

Luminous flux tolerance	+/-10%

Over Time Performance (IEC Compliant)

Median useful life L80B50	40,000 hour(s)
Median useful life L90B50	20,000 hour(s)

Light Technical

Order Code	Full Product Name	Luminous Flux	Correlated Color Temperature (Nom)	Luminous Efficacy (rated) (Nom)
911401508831	SM291C LED10/830 PSU WH	1,000 lm	3000 K	100 lm/W
911401508931	SM291C LED10/840 PSU WH	1,000 lm	4000 K	100 lm/W
911401509031	SM291C LED10/865 PSU WH	1,000 lm	6500 K	100 lm/W
911401509131	SM291C LED10/830 PSU BK	1,000 lm	3000 K	100 lm/W
911401509231	SM291C LED10/840 PSU BK	1,000 lm	4000 K	100 lm/W
911401509331	SM291C LED10/865 PSU BK	1,000 lm	6500 K	100 lm/W
911401509431	SM293C LED20/830 PSU WH	2,000 lm	3000 K	105 lm/W
911401509531	SM293C LED20/840 PSU WH	2,000 lm	4000 K	105 lm/W
911401509731	SM293C LED20/830 PSU BK	2,000 lm	3000 K	105 lm/W

Order Code	Full Product Name	Luminous Flux	Correlated Color Temperature (Nom)	Luminous Efficacy (rated) (Nom)
911401509831	SM293C LED20/840 PSU BK	2,000 lm	4000 K	105 lm/W
911401510031	SM294C LED40/830 PSU WH	3,800 lm	3000 K	105 lm/W
911401510131	SM294C LED40/840 PSU WH	3,800 lm	4000 K	105 lm/W
911401510231	SM294C LED40/865 PSU WH	3,800 lm	6500 K	105 lm/W
911401510331	SM294C LED40/830 PSU BK	3,800 lm	3000 K	105 lm/W
911401510431	SM294C LED40/840 PSU BK	3,800 lm	4000 K	105 lm/W
911401511231	SM294C LED40/830 PSU WP WH	3,800 lm	3000 K	105 lm/W
911401511331	SM294C LED40/840 PSU WP WH	3,800 lm	4000 K	105 lm/W
911401511431	SM294C LED40/865 PSU WP WH	3,800 lm	6500 K	105 lm/W
911401511631	SM294C LED40/840 PSU WP BK	3,800 lm	4000 K	105 lm/W
911401511731	SM294C LED40/865 PSU WP BK	3,800 lm	6500 K	105 lm/W
911401847199	SM291C LED10/830 PSU WH GM	1,000 lm	3000 K	100 lm/W
911401847299	SM291C LED10/840 PSU WH GM	1,000 lm	4000 K	100 lm/W
911401847399	SM291C LED10/865 PSU WH GM	1,000 lm	6500 K	100 lm/W
911401847499	SM293C LED20/830 PSU WH GM	2,000 lm	3000 K	105 lm/W
911401847599	SM293C LED20/840 PSU WH GM	2,000 lm	4000 K	105 lm/W
911401847699	SM293C LED20/865 PSU WH GM	2,000 lm	6500 K	105 lm/W
911401847799	SM295C LED70/840 PSU WP WH GM	6,600 lm	4000 K	100 lm/W
911401847999	SM294C LED40/840 PSU WP WH GM	3,800 lm	4000 K	105 lm/W
911401848099	SM295C LED70/865 PSU WP WH GM	6,600 lm	6500 K	100 lm/W
911401848299	SM294C LED40/865 PSU WP WH GM	3,800 lm	6500 K	105 lm/W
911401848399	SM294C LED40/830 PSU WP WH GM	3,800 lm	3000 K	105 lm/W
911401848599	SM294C LED40/830 PSU WH GM	3,800 lm	3000 K	100 lm/W
911401848699	SM294C LED40/840 PSU WH GM	3,800 lm	4000 K	100 lm/W
911401848799	SM294C LED40/865 PSU WH GM	3,800 lm	6500 K	100 lm/W
911401848899	SM295C LED70/840 PSU WH GM	6,600 lm	4000 K	100 lm/W
911401510631	SM295C LED68/830 PSU WH	6,600 lm	3000 K	100 lm/W
911401510731	SM295C LED68/840 PSU WH	6,600 lm	4000 K	100 lm/W
911401510831	SM295C LED68/865 PSU WH	6,600 lm	6500 K	100 lm/W
911401511031	SM295C LED68/840 PSU BK	6,600 lm	4000 K	100 lm/W
911401511931	SM295C LED68/840 PSU WP WH	6,600 lm	4000 K	100 lm/W
911401512231	SM295C LED68/840 PSU WP BK	6,600 lm	4000 K	100 lm/W
911401512331	SM295C LED68/865 PSU WP BK	6,600 lm	6500 K	100 lm/W

Operating and Electrical

Order Code	Full Product Name	Power Consumption
911401508831	SM291C LED10/830 PSU WH	10 W
911401508931	SM291C LED10/840 PSU WH	10 W
911401509031	SM291C LED10/865 PSU WH	10 W
911401509131	SM291C LED10/830 PSU BK	10 W
911401509231	SM291C LED10/840 PSU BK	10 W

Order Code	Full Product Name	Power Consumption
911401509331	SM291C LED10/865 PSU BK	10 W
911401509431	SM293C LED20/830 PSU WH	19 W
911401509531	SM293C LED20/840 PSU WH	19 W
911401509731	SM293C LED20/830 PSU BK	19 W
911401509831	SM293C LED20/840 PSU BK	19 W
911401510031	SM294C LED40/830 PSU WH	36 W
911401510131	SM294C LED40/840 PSU WH	36 W
911401510231	SM294C LED40/865 PSU WH	36 W
911401510331	SM294C LED40/830 PSU BK	36 W
911401510431	SM294C LED40/840 PSU BK	36 W
911401511231	SM294C LED40/830 PSU WP WH	36 W
911401511331	SM294C LED40/840 PSU WP WH	36 W
911401511431	SM294C LED40/865 PSU WP WH	36 W
911401511631	SM294C LED40/840 PSU WP BK	36 W
911401511731	SM294C LED40/865 PSU WP BK	36 W
911401847199	SM291C LED10/830 PSU WH GM	10 W
911401847299	SM291C LED10/840 PSU WH GM	10 W
911401847399	SM291C LED10/865 PSU WH GM	10 W
911401847499	SM293C LED20/830 PSU WH GM	19 W
911401847599	SM293C LED20/840 PSU WH GM	19 W
911401847699	SM293C LED20/865 PSU WH GM	19 W
911401847799	SM295C LED70/840 PSU WP WH GM	66 W
911401847999	SM294C LED40/840 PSU WP WH GM	36 W
911401848099	SM295C LED70/865 PSU WP WH GM	66 W
911401848299	SM294C LED40/865 PSU WP WH GM	36 W
911401848399	SM294C LED40/830 PSU WP WH GM	36 W
911401848599	SM294C LED40/830 PSU WH GM	38 W
911401848699	SM294C LED40/840 PSU WH GM	38 W
911401848799	SM294C LED40/865 PSU WH GM	38 W
911401848899	SM295C LED70/840 PSU WH GM	66 W
911401510631	SM295C LED68/830 PSU WH	66 W
911401510731	SM295C LED68/840 PSU WH	66 W
911401510831	SM295C LED68/865 PSU WH	66 W
911401511031	SM295C LED68/840 PSU BK	66 W
911401511931	SM295C LED68/840 PSU WP WH	66 W
911401512231	SM295C LED68/840 PSU WP BK	66 W
911401512331	SM295C LED68/865 PSU WP BK	66 W

Mechanical and Housing

Order Code	Full Product Name	Housing Color	Ingress protection code
911401508831	SM291C LED10/830 PSU WH	White	IP20

Order Code	Full Product Name	Housing Color	Ingress protection code
911401508931	SM291C LED10/840 PSU WH	White	IP20
911401509031	SM291C LED10/865 PSU WH	White	IP20
911401509131	SM291C LED10/830 PSU BK	Black	IP20
911401509231	SM291C LED10/840 PSU BK	Black	IP20
911401509331	SM291C LED10/865 PSU BK	Black	IP20
911401509431	SM293C LED20/830 PSU WH	White	IP20
911401509531	SM293C LED20/840 PSU WH	White	IP20
911401509731	SM293C LED20/830 PSU BK	Black	IP20
911401509831	SM293C LED20/840 PSU BK	Black	IP20
911401510031	SM294C LED40/830 PSU WH	White	IP65
911401510131	SM294C LED40/840 PSU WH	White	IP65
911401510231	SM294C LED40/865 PSU WH	White	IP65
911401510331	SM294C LED40/830 PSU BK	Black	IP65
911401510431	SM294C LED40/840 PSU BK	Black	IP65
911401511231	SM294C LED40/830 PSU WP WH	White	IP65
911401511331	SM294C LED40/840 PSU WP WH	White	IP65
911401511431	SM294C LED40/865 PSU WP WH	White	IP65
911401511631	SM294C LED40/840 PSU WP BK	Black	IP65
911401511731	SM294C LED40/865 PSU WP BK	Black	IP65
911401847199	SM291C LED10/830 PSU WH GM	White	IP20
911401847299	SM291C LED10/840 PSU WH GM	White	IP20
911401847399	SM291C LED10/865 PSU WH GM	White	IP20
911401847499	SM293C LED20/830 PSU WH GM	White	IP20
911401847599	SM293C LED20/840 PSU WH GM	White	IP20
911401847699	SM293C LED20/865 PSU WH GM	White	IP20
911401847799	SM295C LED70/840 PSU WP WH GM	White	IP65
911401847999	SM294C LED40/840 PSU WP WH GM	White	IP65
911401848099	SM295C LED70/865 PSU WP WH GM	White	IP65
911401848299	SM294C LED40/865 PSU WP WH GM	White	IP65
911401848399	SM294C LED40/830 PSU WP WH GM	White	IP65
911401848599	SM294C LED40/830 PSU WH GM	White	IP20
911401848699	SM294C LED40/840 PSU WH GM	White	IP20
911401848799	SM294C LED40/865 PSU WH GM	White	IP20
911401848899	SM295C LED70/840 PSU WH GM	White	IP20
911401510631	SM295C LED68/830 PSU WH	White	IP65
911401510731	SM295C LED68/840 PSU WH	White	IP65
911401510831	SM295C LED68/865 PSU WH	White	IP65
911401511031	SM295C LED68/840 PSU BK	Black	IP65
911401511931	SM295C LED68/840 PSU WP WH	White	IP65
911401512231	SM295C LED68/840 PSU WP BK	Black	IP65
911401512331	SM295C LED68/865 PSU WP BK	Black	IP65

Initial Performance (IEC Compliant)

Order Code	Full Product Name	Initial chromaticity
911401508831	SM291C LED10/830 PSU WH	(0.44, 0.40) SDCM <5
911401508931	SM291C LED10/840 PSU WH	(0.38, 0.38) SDCM <5
911401509031	SM291C LED10/865 PSU WH	(0.31, 0.32) SDCM <5
911401509131	SM291C LED10/830 PSU BK	(0.44, 0.40) SDCM <5
911401509231	SM291C LED10/840 PSU BK	(0.38, 0.38) SDCM <5
911401509331	SM291C LED10/865 PSU BK	(0.31, 0.32) SDCM <5
911401509431	SM293C LED20/830 PSU WH	(0.44, 0.40) SDCM <5
911401509531	SM293C LED20/840 PSU WH	(0.38, 0.38) SDCM <5
911401509731	SM293C LED20/830 PSU BK	(0.44, 0.40) SDCM <5
911401509831	SM293C LED20/840 PSU BK	(0.38, 0.38) SDCM <5
911401510031	SM294C LED40/830 PSU WH	(0.44, 0.40) SDCM <5
911401510131	SM294C LED40/840 PSU WH	(0.38, 0.38) SDCM <5
911401510231	SM294C LED40/865 PSU WH	(0.31, 0.32) SDCM <5
911401510331	SM294C LED40/830 PSU BK	(0.44, 0.40) SDCM <5
911401510431	SM294C LED40/840 PSU BK	(0.38, 0.38) SDCM <5
911401511231	SM294C LED40/830 PSU WP WH	(0.44, 0.40) SDCM <5
911401511331	SM294C LED40/840 PSU WP WH	(0.38, 0.38) SDCM <5
911401511431	SM294C LED40/865 PSU WP WH	(0.31, 0.32) SDCM <5
911401511631	SM294C LED40/840 PSU WP BK	(0.38, 0.38) SDCM <5
911401511731	SM294C LED40/865 PSU WP BK	(0.31, 0.32) SDCM <5
911401847199	SM291C LED10/830 PSU WH GM	(0.44, 0.40) SDCM <5
911401847299	SM291C LED10/840 PSU WH GM	(0.38, 0.38) SDCM <5
911401847399	SM291C LED10/865 PSU WH GM	(0.31, 0.32) SDCM <5
911401847499	SM293C LED20/830 PSU WH GM	(0.44, 0.40) SDCM <5
911401847599	SM293C LED20/840 PSU WH GM	(0.38, 0.38) SDCM <5
911401847699	SM293C LED20/865 PSU WH GM	(0.31, 0.32) SDCM <5
911401847799	SM295C LED70/840 PSU WP WH GM	(0.38, 0.38) SDCM <5
911401847999	SM294C LED40/840 PSU WP WH GM	(0.38, 0.38) SDCM <5
911401848099	SM295C LED70/865 PSU WP WH GM	(0.31, 0.32) SDCM <5
911401848299	SM294C LED40/865 PSU WP WH GM	(0.31, 0.32) SDCM <5
911401848399	SM294C LED40/830 PSU WP WH GM	(0.44, 0.40) SDCM <5
911401848599	SM294C LED40/830 PSU WH GM	(0.44, 0.40) SDCM <5
911401848699	SM294C LED40/840 PSU WH GM	(0.38, 0.38) SDCM <5
911401848799	SM294C LED40/865 PSU WH GM	(0.31, 0.32) SDCM <5
911401848899	SM295C LED70/840 PSU WH GM	(0.38, 0.38) SDCM <5
911401510631	SM295C LED68/830 PSU WH	(0.44, 0.40) SDCM<5
911401510731	SM295C LED68/840 PSU WH	(0.38, 0.38) SDCM<5
911401510831	SM295C LED68/865 PSU WH	(0.31, 0.32) SDCM<5
911401511031	SM295C LED68/840 PSU BK	(0.38, 0.38) SDCM<5
911401511931	SM295C LED68/840 PSU WP WH	(0.38, 0.38) SDCM<5
911401512231	SM295C LED68/840 PSU WP BK	(0.38, 0.38) SDCM<5
911401512331	SM295C LED68/865 PSU WP BK	(0.31, 0.32) SDCM<5

Over Time Performance (IEC Compliant)

Order Code	Full Product Name	Driver failure rate at 5000 h
911401508831	SM291C LED10/830 PSU WH	1.00 %
911401508931	SM291C LED10/840 PSU WH	1.00 %
911401509031	SM291C LED10/865 PSU WH	1.00 %
911401509131	SM291C LED10/830 PSU BK	1.00 %
911401509231	SM291C LED10/840 PSU BK	1.00 %
911401509331	SM291C LED10/865 PSU BK	1.00 %
911401509431	SM293C LED20/830 PSU WH	1.00 %
911401509531	SM293C LED20/840 PSU WH	1.00 %
911401509731	SM293C LED20/830 PSU BK	1.00 %
911401509831	SM293C LED20/840 PSU BK	1.00 %
911401510031	SM294C LED40/830 PSU WH	1.00 %
911401510131	SM294C LED40/840 PSU WH	1.00 %
911401510231	SM294C LED40/865 PSU WH	1.00 %
911401510331	SM294C LED40/830 PSU BK	1.00 %
911401510431	SM294C LED40/840 PSU BK	1.00 %
911401511231	SM294C LED40/830 PSU WP WH	1.00 %
911401511331	SM294C LED40/840 PSU WP WH	1.00 %
911401511431	SM294C LED40/865 PSU WP WH	1.00 %
911401511631	SM294C LED40/840 PSU WP BK	1.00 %
911401511731	SM294C LED40/865 PSU WP BK	1.00 %
911401847199	SM291C LED10/830 PSU WH GM	1.00 %
911401847299	SM291C LED10/840 PSU WH GM	1.00 %
911401847399	SM291C LED10/865 PSU WH GM	1.00 %
911401847499	SM293C LED20/830 PSU WH GM	1.00 %
911401847599	SM293C LED20/840 PSU WH GM	1.00 %
911401847699	SM293C LED20/865 PSU WH GM	1.00 %
911401847799	SM295C LED70/840 PSU WP WH GM	1.00 %
911401847999	SM294C LED40/840 PSU WP WH GM	1.00 %
911401848099	SM295C LED70/865 PSU WP WH GM	1.00 %
911401848299	SM294C LED40/865 PSU WP WH GM	1.00 %
911401848399	SM294C LED40/830 PSU WP WH GM	1.00 %
911401848599	SM294C LED40/830 PSU WH GM	1.00 %
911401848699	SM294C LED40/840 PSU WH GM	1.00 %
911401848799	SM294C LED40/865 PSU WH GM	1.00 %
911401848899	SM295C LED70/840 PSU WH GM	1.00 %
911401510631	SM295C LED68/830 PSU WH	0.01 %
911401510731	SM295C LED68/840 PSU WH	0.01 %
911401510831	SM295C LED68/865 PSU WH	0.01 %
911401511031	SM295C LED68/840 PSU BK	0.01 %
911401511931	SM295C LED68/840 PSU WP WH	0.01 %
911401512231	SM295C LED68/840 PSU WP BK	0.01 %
911401512331	SM295C LED68/865 PSU WP BK	0.01 %

© 2026 Signify Holding. All rights reserved. The information provided herein is subject to change, without notice. Signify does not give any representation or warranty as to the accuracy or completeness of the information included herein and shall not be liable for any action in reliance thereon. The information presented in this document is not intended as any commercial offer and does not form part of any quotation or contract, unless otherwise agreed by Signify. Philips and the Philips Shield Emblem are registered trademarks of Koninklijke Philips N.V.