PHILIPS

WT060C LED25S/840 PSU TW1 L1200 BN

911401892880



Ledinaire waterproof, (in brown Eco Packaging), 20 W, L1200 mm, 2500 lm, 4000 K, Symmetrical, Opal, IP66, IK08, TW1

(in brown Eco Packaging), L1200 mm, Polycarbonate, Grey, Power supply unit (On/Off), 2500 lm, 20 W, 125 lm/W, 4000 K, <5, Symmetrical, Opal, Polycarbonate, IP66 | Dust penetration-protected, jet-proof, IK08 | 5 J vandal-protected, Safety class II, Connection unit 3-pole, Feed-through wiring 1-phase

General Information

Light source replaceable	No
Number of gear units	1 unit
Driver included	Yes
Sustainability rating	Unclassified
Service tag	No
Lighting Technology	LED
Value ladder	Value
Warranty period	5 years

Light Technical

Luminous Flux	2,500 lm
Correlated Color Temperature (Nom)	4000 K
Luminous Efficacy (rated) (Nom)	125 lm/W
Color rendering index (CRI)	>80
Beam angle of light source	120 degree(s)
Light source color	840 neutral white
Optic type	Symmetrical
Luminaire light beam spread	120°
Unified glare rating CEN	26

Operating and Electrical

Input Voltage	220 to 240 V
Line Frequency	50 or 60 Hz
Inrush current	2.9 A
Inrush time	0.103 ms
Power Consumption	20 W
Power Factor (Fraction)	0.9
Connection	Connection unit 3-pole
Cable	-
Number of products on MCB of 16 A type B	10
Suitable for random switching	Yes
Protection class IEC	Safety class II
Feed-through wiring	Feed-through wiring 1-phase
Total harmonic distortion	20 %

Controls and Dimming

Dimmable	No
Driver/power unit/transformer	Power supply unit (On/Off)
Control interface	-
Constant light output	No
Maximum dim level	Not applicable

Mechanical and Housing

Housing Material	Polycarbonate
Reflector material	Polycarbonate
Optic material	Polycarbonate
Optical cover material	Polycarbonate
Fixation material	Stainless steel
Housing Color	Grey
Optical cover finish	Opal
Overall length	1,258 mm
Overall width	69 mm
Overall height	59 mm
Dimensions (Height x Width x Depth)	59 x 69 x 1258 mm
Ingress protection code	IP66 [Dust penetration-protected, jet-proof]
Mech. impact protection code	IK08 [5 J vandal-protected]
Net Weight (Piece)	0.640 kg

Approval and Application

Glow-wire test	Temperature 850 °C, duration 30 s
Flammability mark	For mounting on normally flammable surfaces
CE mark	Yes
ENEC mark	-
Photobiological risk	Photobiological risk group 0 @200mm to EN62778
EU RoHS compliant	Yes
Performance ambient temperature Tq	25 °C
Flickering value (PstLM) - Flickering value as per EN 61000-3-3	1
Stroboscopic effect visibility measure (SVM)	1.6
Ambient temperature range	-20 to +45 °C

Initial Performance (IEC Compliant)

Luminous flux tolerance	+/-10%
Initial chromaticity	<5
Power consumption tolerance	+/-10%
Standard Deviation of Colour Matching (McAdam ellipse)	SDCM≤5

Over Time Performance (IEC Compliant)

Control gear failure rate at median useful life 50000 h	7.5 %
Lumen maintenance (EN-IEC 62722-2-1) at median useful life* 50000 h	L70
Lumen maintenance (EN-IEC 62722-2-1) at median useful life* 75000 h	-

Sustainability Data

Repair class	Repair Class D, this product is not designed to be repaired.
Embedded carbon (A1-A3)	8.91 kg CO_2e
Product non-virgin material ratio	18.5 %
Recyclable content ratio of the finished product	57.5 %
GWP total B6 (kg CO2eq) Declared Unit	Please calculate using your local energy mix value: Power Declared Unit (kW) * Service life (hrs) Declared Unit * Energy mix (kg CO2eq / kwh)
GWP total B6 (kg CO2eq) Functional Unit	Please calculate using your local energy mix value: Power Declared Unit (kW) * 1000 (lm) /lumen output (lm) Declared Unit * 35000 (hrs) * Energy mix (kg CO2 eq / kwh)
Non-virgin material ratio of the packaging	Cardboard > 80% recycled
Packaging Recyclable content ratio	Cardboard recycling rate > 80%
Packaging Material	Cardboard

Product Data

Order product name	WT060C LED25S/840 PSU TW1 L1200 BN
Full product name	WT060C LED25S/840 PSU TW1 L1200 BN
Full product code	871016336292299
Order code	911401892880
Material Nr. (12NC)	911401892880
Numerator - Quantity Per Pack	1
EAN/UPC - Product/Case	8710163362922
Numerator - Packs per outer box	12
EAN/UPC - Case	8710163363004

Dimensional drawing

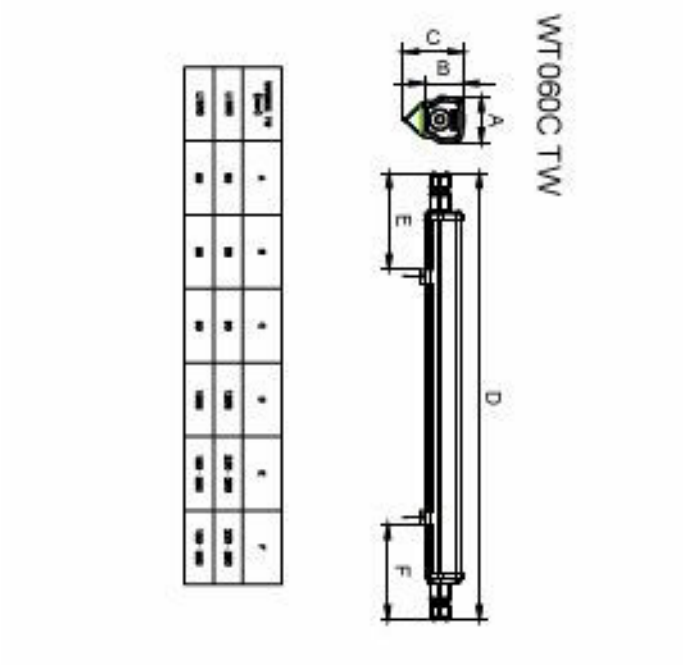

Related Documents

Documents and certificates	Document Name	Download
Environmental Product Declaration	EPD-Philips-Ledinaire-Waterproof-WT060C-LED25S-840-PSU-TW1-L1200-BN-911401892880.pdf	Download
Installation Instructions	Ledinaire_Waterproof_WT060C-MI_v2023 03.pdf	Download

Photometry and lighting design	Document Name	Download
LDT File	WT060C-L1200-LED25S-PSU.ldt	Download
IES File	WT060C-LED25S-PSU-L1200.ies	Download

© 2026 Signify Holding. All rights reserved. The information provided herein is subject to change, without notice. Signify does not give any representation or warranty as to the accuracy or completeness of the information included herein and shall not be liable for any action in reliance thereon. The information presented in this document is not intended as any commercial offer and does not form part of any quotation or contract, unless otherwise agreed by Signify. Philips and the Philips Shield Emblem are registered trademarks of Koninklijke Philips N.V.