PHILIPS

HID ignitors for series systems

IGHID



Digital ignitors for maximum reliability

HID ignitors for series systems

Benefits

- Easy installation and wiring
- Can operate with both semi-parallel and series ballasts
- Digital ignitors ensure maximum reliability

Applications

- Outdoor lighting (most popular application: road and tunnel lighting)

Features

- Ignitors equipped with screw terminal blocks as standard
- Series ignitor will only work in series circuits

Versions



GPPR_SND_PHL-Product photo



GPPR SI 0001



GPPR_SN_0001-Product photo

Dimensional drawing

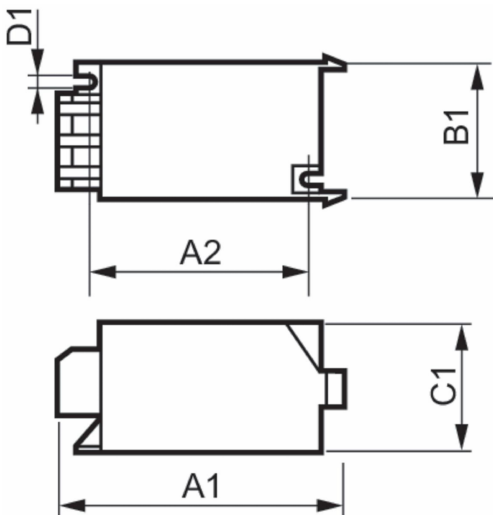

Product	D1	C1	A1	A2	B1
SI 51 220-240V 50/60Hz	4.3 mm	38.0 mm	84.5 mm	65.0 mm	41.0 mm

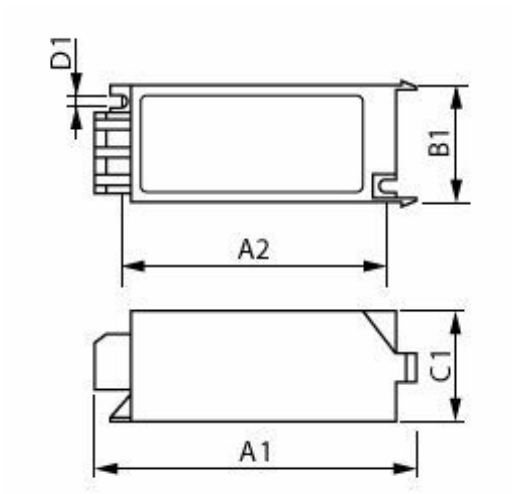

Product	D1	C1	A1	A2	B1
SN 59 220-240V 50/60Hz	4.3 mm	38.0 mm	114.5 mm	95.0 mm	41.0 mm

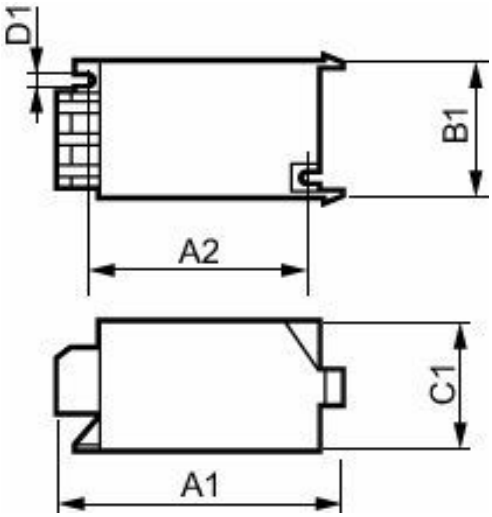

Product	D1	C1	A1	A2	B1
SND 57 220-240V 50/60Hz	4.3 mm	38.5 mm	84.5 mm	65.0 mm	41.5 mm
SND 58 220-240V 50/60Hz	4.3 mm	38.5 mm	84.5 mm	65.0 mm	41.5 mm

Operating and Electrical

Input Voltage	220 to 240 V
Line Frequency	50 to 60 Hz
Input Frequency	50 to 60 Hz

Mechanical and Housing

Order Code	Full Product Name	Housing
913700184966	SND 57 220-240V 50/60Hz	SNI-85
913700185166	SND 58 220-240V 50/60Hz	SNI-85
913619519966	SI 51 220-240V 50/60Hz	SNI-85
913619659966	SN 59 220-240V 50/60Hz	SNI-115

© 2026 Signify Holding. All rights reserved. The information provided herein is subject to change, without notice. Signify does not give any representation or warranty as to the accuracy or completeness of the information included herein and shall not be liable for any action in reliance thereon. The information presented in this document is not intended as any commercial offer and does not form part of any quotation or contract, unless otherwise agreed by Signify. Philips and the Philips Shield Emblem are registered trademarks of Koninklijke Philips N.V.