PHILIPS

GreenSpace Surface Mount

SM303C



Elegant, Comprehensive and Affordable

Retail & Hospitality has a clear trend that clusters of choices is one of the most important DNAs that being strongly expected in this specific applications. GreenSpace Surface Mount is the entry level downlight family dedicated with suspension and surface mount versions, which offers a complete range of options for optical solutions, lumen outputs and color temperatures with multiple form factors available.

Benefits

- Elegant look & feel.
- Complete family with multiple installations and form factors.
- Good glare control with color rendering performance.
- Ensured quality and reliability.

Applications

- Retail
- Hospitality
- Fashion

Features

- Both round and square version available.
- Both suspension and surface mount version available.
- UGR19 & CRI90, SDCM≤3
- Wide range of lumen packages, beam angles and color temperatures available.

Versions

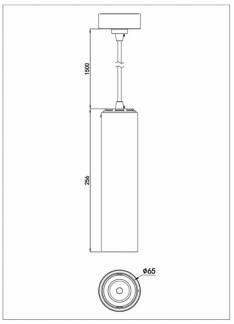

GreenUp Suspended Mount
P6 P9

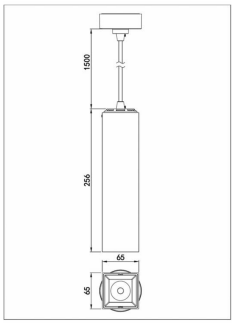

GreenUp Suspended Mount
P6S P9S



GreenUp Surface Mount



GreenUp Surface Mount



GreenUp Surface Mount



GreenUp Surface Mount



GreenUp Surface Mount

Dimensional drawing

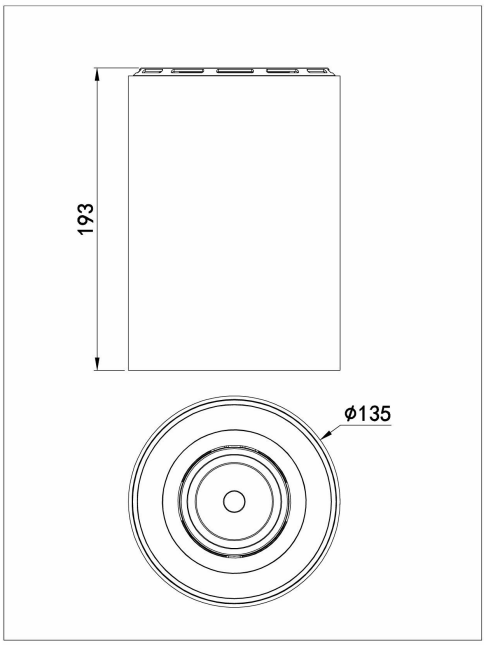

GreenUp Surface Mount

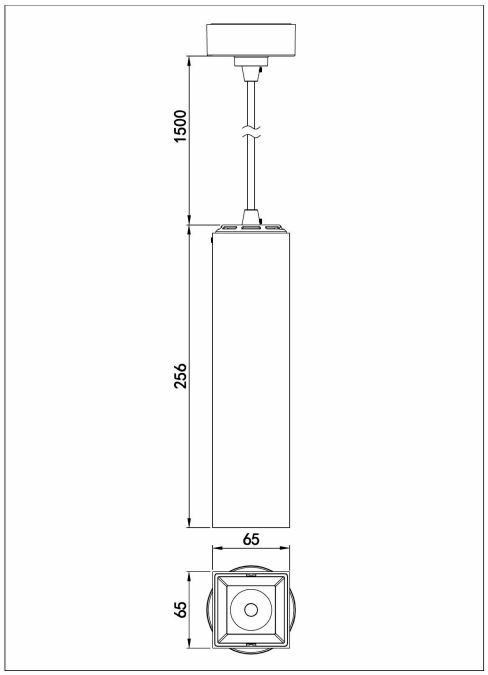

GreenUp Suspended Mount SP303P P6S P9S

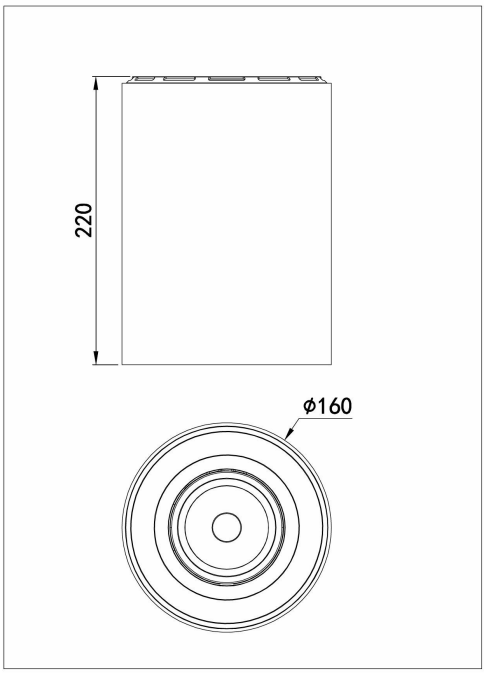

SM303C P24 930 PSU MB PLUS

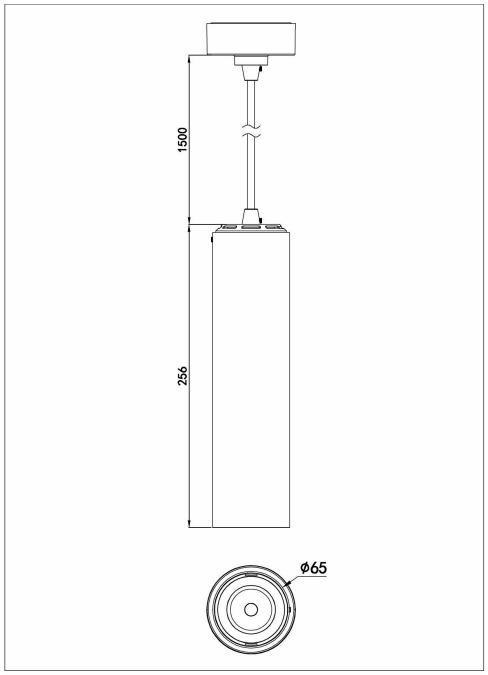

SP303P P8 927 PSU WB PLUS

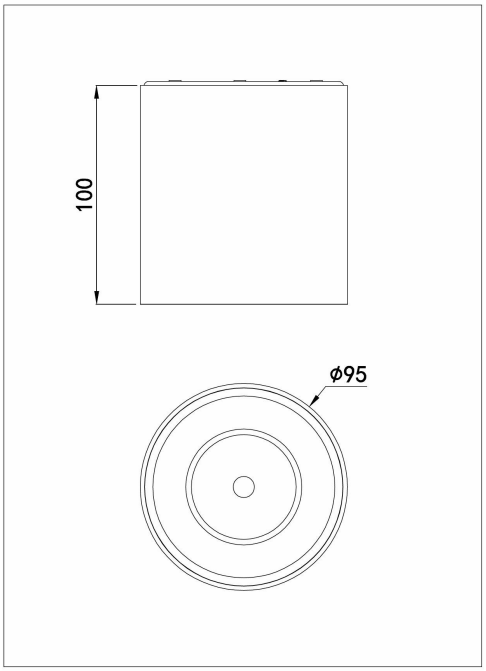

GreenUp Surface Mount

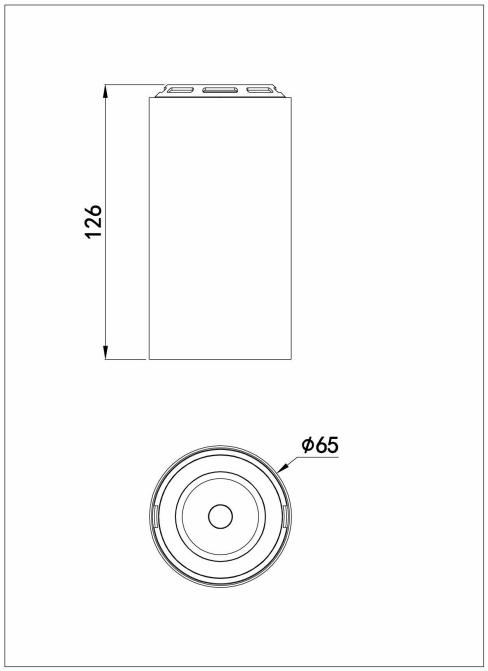

SM303C P8 930 PSU NB PLUS

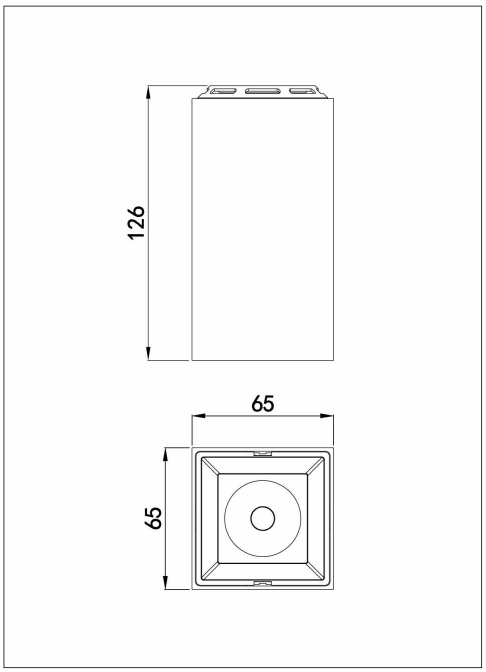

SM303C P8S 950 PSU VWB PLUS

General Information

Driver included	Yes

Operating and Electrical

Line Frequency	50 to 60 Hz
Protection class IEC	Safety class II

Mechanical and Housing

Ingress protection code	IP20 [Finger-protected]

Approval and Application

ENEC mark	-
Ambient temperature range	-20 to +40 °C

Light Technical

Order Code	Full Product Name	Luminous Flux	Correlated Color Temperature (Nom)	Luminous Efficacy (rated) (Nom)	Color rendering index (CRI)	Beam angle of light source
911401513348	SP303P P8 927 PSU MB PLUS	775 lm	2700 K	97 lm/W	90	24 degree(s)
911401513448	SP303P P8 927 PSU NB PLUS	720 lm	2700 K	90 lm/W	90	15 x 15 degree(s)
911401513548	SP303P P8 927 PSU VWB PLUS	770 lm	2700 K	96 lm/W	90	55 degree(s)
911401513648	SP303P P8 927 PSU WB PLUS	815 lm	2700 K	102 lm/W	90	38 degree(s)
911401513748	SP303P P8 930 PSU MB PLUS	775 lm	3000 K	97 lm/W	90	24 degree(s)
911401513848	SP303P P8 930 PSU NB PLUS	720 lm	3000 K	90 lm/W	90	15 x 15 degree(s)
911401513948	SP303P P8 930 PSU VWB PLUS	770 lm	3000 K	96 lm/W	90	55 degree(s)
911401514048	SP303P P8 930 PSU WB PLUS	825 lm	3000 K	103 lm/W	90	38 degree(s)
911401514148	SP303P P8 940 PSU MB PLUS	850 lm	4000 K	106 lm/W	90	24 degree(s)
911401514248	SP303P P8 940 PSU NB PLUS	785 lm	4000 K	98 lm/W	90	15 x 15 degree(s)
911401514348	SP303P P8 940 PSU VWB PLUS	840 lm	4000 K	105 lm/W	90	55 degree(s)
911401514448	SP303P P8 940 PSU WB PLUS	880 lm	4000 K	110 lm/W	90	38 degree(s)
911401514548	SP303P P8 950 PSU MB PLUS	810 lm	5000 K	101.25 lm/W	90	24 degree(s)
911401514648	SP303P P8 950 PSU NB PLUS	755 lm	5000 K	94.375 lm/W	90	15 x 15 degree(s)
911401514748	SP303P P8 950 PSU VWB PLUS	805 lm	5000 K	100.625 lm/W	90	55 degree(s)
911401514848	SP303P P8 950 PSU WB PLUS	865 lm	5000 K	108.125 lm/W	90	38 degree(s)
911401596012	SP303P P9 940 PSU NB	690 lm	4000 K	77 lm/W	>90	-
911401596612	SP303P P9 950 PSU WB	840 lm	5000 K	93 lm/W	>90	-
911401599212	SP303P P6S 930 PSU NB	460 lm	3000 K	77 lm/W	>90	-
911401599412	SP303P P6S 930 PSU WB	550 lm	3000 K	91 lm/W	>90	-
911401504122	SP303P P9S 940 PSU MB	770 lm	4000 K	85 lm/W	>90	-
911401504322	SP303P P9S 940 PSU VWB	780 lm	4000 K	87 lm/W	>90	-
911401514948	SP303P P8S 927 PSU MB PLUS	775 lm	2700 K	97 lm/W	90	24 degree(s)
911401515048	SP303P P8S 927 PSU NB PLUS	720 lm	2700 K	90 lm/W	90	15 x 15 degree(s)
911401515148	SP303P P8S 927 PSU VWB PLUS	770 lm	2700 K	96 lm/W	90	55 degree(s)

Order Code	Full Product Name	Luminous Flux	Correlated Color Temperature (Nom)	Luminous Efficacy (rated) (Nom)	Color rendering index (CRI)	Beam angle of light source
911401515248	SP303P P8S 927 PSU WB PLUS	815 lm	2700 K	102 lm/W	90	38 degree(s)
911401515348	SP303P P8S 930 PSU MB PLUS	775 lm	3000 K	97 lm/W	90	24 degree(s)
911401515448	SP303P P8S 930 PSU NB PLUS	720 lm	3000 K	90 lm/W	90	15 x 15 degree(s)
911401515548	SP303P P8S 930 PSU VWB PLUS	770 lm	3000 K	96 lm/W	90	55 degree(s)
911401515648	SP303P P8S 930 PSU WB PLUS	825 lm	3000 K	103 lm/W	90	38 degree(s)
911401515748	SP303P P8S 940 PSU MB PLUS	850 lm	4000 K	106 lm/W	90	24 degree(s)
911401515848	SP303P P8S 940 PSU NB PLUS	785 lm	4000 K	98 lm/W	90	15 x 15 degree(s)
911401515948	SP303P P8S 940 PSU VWB PLUS	840 lm	4000 K	105 lm/W	90	55 degree(s)
911401516048	SP303P P8S 940 PSU WB PLUS	880 lm	4000 K	110 lm/W	90	38 degree(s)
911401516148	SP303P P8S 950 PSU MB PLUS	810 lm	5000 K	101.25 lm/W	90	24 degree(s)
911401516248	SP303P P8S 950 PSU NB PLUS	755 lm	5000 K	94.375 lm/W	90	15 x 15 degree(s)
911401516348	SP303P P8S 950 PSU VWB PLUS	805 lm	5000 K	100.625 lm/W	90	55 degree(s)
911401516448	SP303P P8S 950 PSU WB PLUS	865 lm	5000 K	108.125 lm/W	90	38 degree(s)
911401510248	SM303C P24 927 PSU MB PLUS	2,440 lm	2700 K	101.66666666666667 lm/W	90	24 degree(s)
911401510348	SM303C P24 927 PSU NB PLUS	2,445 lm	2700 K	101.875 lm/W	90	15 x 15 degree(s)
911401510448	SM303C P24 927 PSU VWB PLUS	2,390 lm	2700 K	99.58333333333333 lm/W	90	55 degree(s)
911401510548	SM303C P24 927 PSU WB PLUS	2,490 lm	2700 K	103.75 lm/W	90	38 degree(s)
911401510648	SM303C P24 930 PSU MB PLUS	2,645 lm	3000 K	110.20833333333333 lm/W	90	24 degree(s)
911401510748	SM303C P24 930 PSU NB PLUS	2,670 lm	3000 K	111.25 lm/W	90	15 x 15 degree(s)
911401510848	SM303C P24 930 PSU VWB PLUS	2,500 lm	3000 K	104.16666666666667 lm/W	90	55 degree(s)
911401510948	SM303C P24 930 PSU WB PLUS	2,615 lm	3000 K	108.95833333333333 lm/W	90	38 degree(s)
911401511048	SM303C P24 940 PSU MB PLUS	2,725 lm	4000 K	113.54166666666667 lm/W	90	24 degree(s)
911401511148	SM303C P24 940 PSU NB PLUS	2,735 lm	4000 K	113.95833333333333 lm/W	90	15 x 15 degree(s)
911401511248	SM303C P24 940 PSU WB PLUS	2,740 lm	4000 K	114.16666666666667 lm/W	90	38 degree(s)
911401511348	SM303C P24 950 PSU MB PLUS	2,775 lm	5000 K	115.625 lm/W	90	24 degree(s)
911401511448	SM303C P24 950 PSU NB PLUS	2,800 lm	5000 K	116.66666666666667 lm/W	90	15 x 15 degree(s)
911401511522	SM303C P24 930 PSU VWB	2,260 lm	3000 K	94 lm/W	>90	-
911401511548	SM303C P24 950 PSU VWB PLUS	2,625 lm	5000 K	109.375 lm/W	90	55 degree(s)
911401511648	SM303C P24 950 PSU WB PLUS	2,745 lm	5000 K	114.375 lm/W	90	38 degree(s)
911401511748	SM303C P28 927 PSU MB PLUS	2,760 lm	2700 K	98.57142857142857 lm/W	90	24 degree(s)
911401511848	SM303C P28 927 PSU NB PLUS	2,790 lm	2700 K	99.64285714285714 lm/W	90	15 x 15 degree(s)
911401511948	SM303C P28 927 PSU VWB PLUS	2,710 lm	2700 K	96.78571428571429 lm/W	90	55 degree(s)
911401512048	SM303C P28 927 PSU WB PLUS	2,825 lm	2700 K	100.89285714285714 lm/W	90	38 degree(s)
911401512148	SM303C P28 930 PSU MB PLUS	2,975 lm	3000 K	106.25 lm/W	90	24 degree(s)
911401512248	SM303C P28 930 PSU NB PLUS	2,970 lm	3000 K	106.07142857142857 lm/W	90	15 x 15 degree(s)
911401512348	SM303C P28 930 PSU VWB PLUS	2,865 lm	3000 K	102.32142857142857 lm/W	90	55 degree(s)
911401512448	SM303C P28 930 PSU WB PLUS	2,970 lm	3000 K	106.07142857142857 lm/W	90	38 degree(s)
911401512548	SM303C P28 940 PSU MB PLUS	3,075 lm	4000 K	109.82142857142857 lm/W	90	24 degree(s)
911401512648	SM303C P28 940 PSU NB PLUS	3,120 lm	4000 K	111.42857142857143 lm/W	90	15 x 15 degree(s)
911401512748	SM303C P28 940 PSU VWB PLUS	2,995 lm	4000 K	106.96428571428571 lm/W	90	55 degree(s)

Order Code	Full Product Name	Luminous Flux	Correlated Color Temperature (Nom)	Luminous Efficacy (rated) (Nom)	Color rendering index (CRI)	Beam angle of light source
911401512848	SM303C P28 940 PSU WB PLUS	3,110 lm	4000 K	111.07142857142857 lm/W	90	38 degree(s)
911401512948	SM303C P28 950 PSU MB PLUS	3,125 lm	5000 K	111.60714285714286 lm/W	90	24 degree(s)
911401513048	SM303C P28 950 PSU NB PLUS	3,120 lm	5000 K	111.42857142857143 lm/W	90	15 x 15 degree(s)
911401513148	SM303C P28 950 PSU VWB PLUS	3,010 lm	5000 K	107.5 lm/W	90	55 degree(s)
911401513248	SM303C P28 950 PSU WB PLUS	3,120 lm	5000 K	111.42857142857143 lm/W	90	38 degree(s)
911401515222	SM303C P28 930 PSU NB	2,490 lm	3000 K	89 lm/W	>90	-
911401516222	SM303C P28 940 PSU WB	2,740 lm	4000 K	98 lm/W	>90	-
911401516322	SM303C P28 940 PSU VWB	2,690 lm	4000 K	96 lm/W	>90	-
911401547932	SM303C P24 940 PSU VWB	2,280 lm	4000 K	95 lm/W	>90	-
911401518022	SM304C P10 930 PSU MB	770 lm	3000 K	76 lm/W	>90	-
911401518122	SM304C P10 930 PSU WB	810 lm	3000 K	78 lm/W	>90	-
911401518522	SM304C P10 940 PSU WB	860 lm	4000 K	83 lm/W	>90	-
911401518722	SM304C P10 950 PSU WB	890 lm	5000 K	88 lm/W	>90	-
911401520722	SM304C P12 950 PSU WB	1,050 lm	5000 K	86 lm/W	>90	-
911401522022	SM304C P15 930 PSU MB	1,130 lm	3000 K	75 lm/W	>90	-
911401522122	SM304C P15 930 PSU WB	1,170 lm	3000 K	78 lm/W	>90	-
911401522422	SM304C P15 940 PSU MB	1,170 lm	4000 K	78 lm/W	>90	-
911401522522	SM304C P15 940 PSU WB	1,230 lm	4000 K	82 lm/W	>90	-
911401541248	SM303C P8S 927 PSU MB PLUS	882 lm	2700 K	97 lm/W	90	24 degree(s)
911401541348	SM303C P8S 927 PSU NB PLUS	883 lm	2700 K	90 lm/W	90	15 x 15 degree(s)
911401541448	SM303C P8S 927 PSU VWB PLUS	884 lm	2700 K	96 lm/W	90	55 degree(s)
911401541548	SM303C P8S 927 PSU WB PLUS	885 lm	2700 K	102 lm/W	90	38 degree(s)
911401541648	SM303C P8S 930 PSU MB PLUS	886 lm	3000 K	97 lm/W	90	24 degree(s)
911401541748	SM303C P8S 930 PSU NB PLUS	887 lm	3000 K	90 lm/W	90	15 x 15 degree(s)
911401541848	SM303C P8S 930 PSU VWB PLUS	888 lm	3000 K	96 lm/W	90	55 degree(s)
911401541948	SM303C P8S 930 PSU WB PLUS	889 lm	3000 K	103 lm/W	90	38 degree(s)
911401542048	SM303C P8S 940 PSU MB PLUS	890 lm	4000 K	106 lm/W	90	24 degree(s)
911401542148	SM303C P8S 940 PSU NB PLUS	891 lm	4000 K	98 lm/W	90	15 x 15 degree(s)
911401542248	SM303C P8S 940 PSU VWB PLUS	892 lm	4000 K	105 lm/W	90	55 degree(s)
911401542348	SM303C P8S 940 PSU WB PLUS	893 lm	4000 K	110 lm/W	90	38 degree(s)
911401542448	SM303C P8S 950 PSU MB PLUS	894 lm	5000 K	101 lm/W	90	24 degree(s)
911401542548	SM303C P8S 950 PSU NB PLUS	895 lm	5000 K	94 lm/W	90	15 x 15 degree(s)
911401542648	SM303C P8S 950 PSU VWB PLUS	896 lm	5000 K	101 lm/W	90	55 degree(s)
911401542748	SM303C P8S 950 PSU WB PLUS	897 lm	5000 K	108 lm/W	90	38 degree(s)
911401584212	SM303C P6S 940 PSU WB	560 lm	4000 K	94 lm/W	>90	-
911401584312	SM303C P6S 940 PSU VWB	550 lm	4000 K	91 lm/W	>90	-
911401584512	SM303C P6S 950 PSU MB	540 lm	5000 K	90 lm/W	>90	-
911401587412	SM303C P9S 930 PSU WB	780 lm	3000 K	87 lm/W	>90	-
911401588212	SM303C P9S 940 PSU WB	810 lm	4000 K	90 lm/W	>90	-
911401507422	SM303C P20 930 PSU WB	1,800 lm	3000 K	90 lm/W	>90	-

Order Code	Full Product Name	Luminous Flux	Correlated Color Temperature (Nom)	Luminous Efficacy (rated) (Nom)	Color rendering index (CRI)	Beam angle of light source
911401508122	SM303C P20 940 PSU MB	1,980 lm	4000 K	99 lm/W	>90	-
911401508222	SM303C P20 940 PSU WB	2,000 lm	4000 K	100 lm/W	>90	-
911401508322	SM303C P20 940 PSU VWB	2,000 lm	4000 K	100 lm/W	>90	-
911401508848	SM303C P20 927 PSU MB PLUS	1,965 lm	2700 K	98.25 lm/W	90	24 degree(s)
911401508948	SM303C P20 927 PSU NB PLUS	1,920 lm	2700 K	96 lm/W	90	15 x 15 degree(s)
911401509048	SM303C P20 927 PSU VWB PLUS	1,950 lm	2700 K	97.5 lm/W	90	55 degree(s)
911401509148	SM303C P20 927 PSU WB PLUS	1,980 lm	2700 K	99 lm/W	90	38 degree(s)
911401509248	SM303C P20 930 PSU MB PLUS	2,110 lm	3000 K	105.5 lm/W	90	24 degree(s)
911401509348	SM303C P20 930 PSU NB PLUS	2,060 lm	3000 K	103 lm/W	90	15 x 15 degree(s)
911401509448	SM303C P20 930 PSU VWB PLUS	2,080 lm	3000 K	104 lm/W	90	55 degree(s)
911401509548	SM303C P20 930 PSU WB PLUS	2,095 lm	3000 K	104.75 lm/W	90	38 degree(s)
911401509648	SM303C P20 940 PSU MB PLUS	2,200 lm	4000 K	110 lm/W	90	24 degree(s)
911401509748	SM303C P20 940 PSU NB PLUS	2,175 lm	4000 K	108.75 lm/W	90	15 x 15 degree(s)
911401509848	SM303C P20 940 PSU VWB PLUS	2,230 lm	4000 K	111.5 lm/W	90	55 degree(s)
911401509948	SM303C P20 940 PSU WB PLUS	2,215 lm	4000 K	110.75 lm/W	90	38 degree(s)
911401510048	SM303C P20 950 PSU MB PLUS	2,215 lm	5000 K	110.75 lm/W	90	24 degree(s)
911401510148	SM303C P20 950 PSU NB PLUS	2,160 lm	5000 K	108 lm/W	90	15 x 15 degree(s)
911401547832	SM303C P20 950 PSU WB	1,800 lm	5000 K	90 lm/W	>90	-
911401539648	SM303C P8 927 PSU MB PLUS	866 lm	2700 K	97 lm/W	90	24 degree(s)
911401539748	SM303C P8 927 PSU NB PLUS	867 lm	2700 K	90 lm/W	90	15 x 15 degree(s)
911401539848	SM303C P8 927 PSU VWB PLUS	868 lm	2700 K	96 lm/W	90	55 degree(s)
911401539948	SM303C P8 927 PSU WB PLUS	869 lm	2700 K	102 lm/W	90	38 degree(s)
911401540048	SM303C P8 930 PSU MB PLUS	870 lm	3000 K	97 lm/W	90	24 degree(s)
911401540148	SM303C P8 930 PSU NB PLUS	871 lm	3000 K	90 lm/W	90	15 x 15 degree(s)
911401540248	SM303C P8 930 PSU VWB PLUS	872 lm	3000 K	96 lm/W	90	55 degree(s)
911401540348	SM303C P8 930 PSU WB PLUS	873 lm	3000 K	103 lm/W	90	38 degree(s)
911401540448	SM303C P8 940 PSU MB PLUS	874 lm	4000 K	106 lm/W	90	24 degree(s)
911401540548	SM303C P8 940 PSU NB PLUS	875 lm	4000 K	98 lm/W	90	15 x 15 degree(s)
911401540648	SM303C P8 940 PSU VWB PLUS	876 lm	4000 K	105 lm/W	90	55 degree(s)
911401540748	SM303C P8 940 PSU WB PLUS	877 lm	4000 K	110 lm/W	90	38 degree(s)
911401540848	SM303C P8 950 PSU MB PLUS	878 lm	5000 K	101 lm/W	90	24 degree(s)
911401540948	SM303C P8 950 PSU NB PLUS	879 lm	5000 K	94 lm/W	90	15 x 15 degree(s)
911401541048	SM303C P8 950 PSU VWB PLUS	880 lm	5000 K	101 lm/W	90	55 degree(s)
911401541148	SM303C P8 950 PSU WB PLUS	881 lm	5000 K	108 lm/W	90	38 degree(s)
911401574912	SM303C P6 927 PSU MB	500 lm	2700 K	84 lm/W	>90	-
911401575112	SM303C P6 927 PSU VWB	500 lm	2700 K	84 lm/W	>90	-
911401575512	SM303C P6 930 PSU VWB	520 lm	3000 K	87 lm/W	>90	-
911401576312	SM303C P6 940 PSU VWB	550 lm	4000 K	91 lm/W	>90	-
911401579412	SM303C P9 930 PSU WB	780 lm	3000 K	87 lm/W	>90	-
911401579512	SM303C P9 930 PSU VWB	760 lm	3000 K	84 lm/W	>90	-
911401580312	SM303C P9 940 PSU VWB	780 lm	4000 K	87 lm/W	>90	-

Operating and Electrical

Order Code	Full Product Name	Input Voltage	Power Consumption
911401513348	SP303P P8 927 PSU MB PLUS	100-242 V 100-254 V 220 to 240 V	8 W
911401513448	SP303P P8 927 PSU NB PLUS	100-242 V 100-254 V 220 to 240 V	8 W
911401513548	SP303P P8 927 PSU VWB PLUS	100-242 V 100-254 V 220 to 240 V	8 W
911401513648	SP303P P8 927 PSU WB PLUS	100-242 V 100-254 V 220 to 240 V	8 W
911401513748	SP303P P8 930 PSU MB PLUS	100-242 V 100-254 V 220 to 240 V	8 W
911401513848	SP303P P8 930 PSU NB PLUS	100-242 V 100-254 V 220 to 240 V	8 W
911401513948	SP303P P8 930 PSU VWB PLUS	100-242 V 100-254 V 220 to 240 V	8 W
911401514048	SP303P P8 930 PSU WB PLUS	100-242 V 100-254 V 220 to 240 V	8 W
911401514148	SP303P P8 940 PSU MB PLUS	100-242 V 100-254 V 220 to 240 V	8 W
911401514248	SP303P P8 940 PSU NB PLUS	100-242 V 100-254 V 220 to 240 V	8 W
911401514348	SP303P P8 940 PSU VWB PLUS	100-242 V 100-254 V 220 to 240 V	8 W
911401514448	SP303P P8 940 PSU WB PLUS	100-242 V 100-254 V 220 to 240 V	8 W
911401514548	SP303P P8 950 PSU MB PLUS	100-242 V 100-254 V 220 to 240 V	8 W
911401514648	SP303P P8 950 PSU NB PLUS	100-242 V 100-254 V 220 to 240 V	8 W
911401514748	SP303P P8 950 PSU VWB PLUS	100-242 V 100-254 V 220 to 240 V	8 W
911401514848	SP303P P8 950 PSU WB PLUS	100-242 V 100-254 V 220 to 240 V	8 W
911401596012	SP303P P9 940 PSU NB	200 to 240 V	8.1 W 9.9 W
911401596612	SP303P P9 950 PSU WB	200 to 240 V	8.1 W 9.9 W
911401599212	SP303P P6S 930 PSU NB	200 to 240 V	5.4 W 6.6 W

Order Code	Full Product Name	Input Voltage	Power Consumption
911401599412	SP303P P6S 930 PSU WB	200 to 240 V	5.4 W 6.6 W
911401504122	SP303P P9S 940 PSU MB	200 to 240 V	8.1 W 9.9 W
911401504322	SP303P P9S 940 PSU VWB	200 to 240 V	8.1 W 9.9 W
911401514948	SP303P P8S 927 PSU MB PLUS	100-242 V 100-254 V 220 to 240 V	8 W
911401515048	SP303P P8S 927 PSU NB PLUS	100-242 V 100-254 V 220 to 240 V	8 W
911401515148	SP303P P8S 927 PSU VWB PLUS	100-242 V 100-254 V 220 to 240 V	8 W
911401515248	SP303P P8S 927 PSU WB PLUS	100-242 V 100-254 V 220 to 240 V	8 W
911401515348	SP303P P8S 930 PSU MB PLUS	100-242 V 100-254 V 220 to 240 V	8 W
911401515448	SP303P P8S 930 PSU NB PLUS	100-242 V 100-254 V 220 to 240 V	8 W
911401515548	SP303P P8S 930 PSU VWB PLUS	100-242 V 100-254 V 220 to 240 V	8 W
911401515648	SP303P P8S 930 PSU WB PLUS	100-242 V 100-254 V 220 to 240 V	8 W
911401515748	SP303P P8S 940 PSU MB PLUS	100-242 V 100-254 V 220 to 240 V	8 W
911401515848	SP303P P8S 940 PSU NB PLUS	100-242 V 100-254 V 220 to 240 V	8 W
911401515948	SP303P P8S 940 PSU VWB PLUS	100-242 V 100-254 V 220 to 240 V	8 W
911401516048	SP303P P8S 940 PSU WB PLUS	100-242 V 100-254 V 220 to 240 V	8 W
911401516148	SP303P P8S 950 PSU MB PLUS	100-242 V 100-254 V 220 to 240 V	8 W
911401516248	SP303P P8S 950 PSU NB PLUS	100-242 V 100-254 V 220 to 240 V	8 W
911401516348	SP303P P8S 950 PSU VWB PLUS	100-242 V 100-254 V 220 to 240 V	8 W
911401516448	SP303P P8S 950 PSU WB PLUS	100-242 V 100-254 V 220 to 240 V	8 W
911401510248	SM303C P24 927 PSU MB PLUS	100-242 V 100-254 V 220 to 240 V	24 W

Order Code	Full Product Name	Input Voltage	Power Consumption
911401510348	SM303C P24 927 PSU NB PLUS	100-242 V 100-254 V 220 to 240 V	24 W
911401510448	SM303C P24 927 PSU VWB PLUS	100-242 V 100-254 V 220 to 240 V	24 W
911401510548	SM303C P24 927 PSU WB PLUS	100-242 V 100-254 V 220 to 240 V	24 W
911401510648	SM303C P24 930 PSU MB PLUS	100-242 V 100-254 V 220 to 240 V	24 W
911401510748	SM303C P24 930 PSU NB PLUS	100-242 V 100-254 V 220 to 240 V	24 W
911401510848	SM303C P24 930 PSU VWB PLUS	100-242 V 100-254 V 220 to 240 V	24 W
911401510948	SM303C P24 930 PSU WB PLUS	100-242 V 100-254 V 220 to 240 V	24 W
911401511048	SM303C P24 940 PSU MB PLUS	100-242 V 100-254 V 220 to 240 V	24 W
911401511148	SM303C P24 940 PSU NB PLUS	100-242 V 100-254 V 220 to 240 V	24 W
911401511248	SM303C P24 940 PSU WB PLUS	100-242 V 100-254 V 220 to 240 V	24 W
911401511348	SM303C P24 950 PSU MB PLUS	100-242 V 100-254 V 220 to 240 V	24 W
911401511448	SM303C P24 950 PSU NB PLUS	100-242 V 100-254 V 220 to 240 V	24 W
911401511522	SM303C P24 930 PSU VWB	200 to 240 V	21.6 W 26.4 W
911401511548	SM303C P24 950 PSU VWB PLUS	100-242 V 100-254 V 220 to 240 V	24 W
911401511648	SM303C P24 950 PSU WB PLUS	100-242 V 100-254 V 220 to 240 V	24 W
911401511748	SM303C P28 927 PSU MB PLUS	100-242 V 100-254 V 220 to 240 V	28 W
911401511848	SM303C P28 927 PSU NB PLUS	100-242 V 100-254 V 220 to 240 V	28 W
911401511948	SM303C P28 927 PSU VWB PLUS	100-242 V 100-254 V 220 to 240 V	28 W
911401512048	SM303C P28 927 PSU WB PLUS	100-242 V 100-254 V 220 to 240 V	28 W
911401512148	SM303C P28 930 PSU MB PLUS	100-242 V 100-254 V 220 to 240 V	28 W

Order Code	Full Product Name	Input Voltage	Power Consumption
911401512248	SM303C P28 930 PSU NB PLUS	100-242 V 100-254 V 220 to 240 V	28 W
911401512348	SM303C P28 930 PSU VWB PLUS	100-242 V 100-254 V 220 to 240 V	28 W
911401512448	SM303C P28 930 PSU WB PLUS	100-242 V 100-254 V 220 to 240 V	28 W
911401512548	SM303C P28 940 PSU MB PLUS	100-242 V 100-254 V 220 to 240 V	28 W
911401512648	SM303C P28 940 PSU NB PLUS	100-242 V 100-254 V 220 to 240 V	28 W
911401512748	SM303C P28 940 PSU VWB PLUS	100-242 V 100-254 V 220 to 240 V	28 W
911401512848	SM303C P28 940 PSU WB PLUS	100-242 V 100-254 V 220 to 240 V	28 W
911401512948	SM303C P28 950 PSU MB PLUS	100-242 V 100-254 V 220 to 240 V	28 W
911401513048	SM303C P28 950 PSU NB PLUS	100-242 V 100-254 V 220 to 240 V	28 W
911401513148	SM303C P28 950 PSU VWB PLUS	100-242 V 100-254 V 220 to 240 V	28 W
911401513248	SM303C P28 950 PSU WB PLUS	100-242 V 100-254 V 220 to 240 V	28 W
911401515222	SM303C P28 930 PSU NB	200 to 240 V	25.2 W 30.8 W
911401516222	SM303C P28 940 PSU WB	200 to 240 V	25.2 W 30.8 W
911401516322	SM303C P28 940 PSU VWB	200 to 240 V	25.2 W 30.8 W
911401547932	SM303C P24 940 PSU VWB	220-240 V	24 W
911401518022	SM304C P10 930 PSU MB	200 to 240 V	11 W 9 W
911401518122	SM304C P10 930 PSU WB	200 to 240 V	11 W 9 W
911401518522	SM304C P10 940 PSU WB	200 to 240 V	11 W 9 W
911401518722	SM304C P10 950 PSU WB	200 to 240 V	11 W 9 W
911401520722	SM304C P12 950 PSU WB	200 to 240 V	10.8 W 13.2 W
911401522022	SM304C P15 930 PSU MB	200 to 240 V	13.5 W 16.5 W
911401522122	SM304C P15 930 PSU WB	200 to 240 V	13.5 W 16.5 W

Order Code	Full Product Name	Input Voltage	Power Consumption
911401522422	SM304C P15 940 PSU MB	200 to 240 V	13.5 W 16.5 W
911401522522	SM304C P15 940 PSU WB	200 to 240 V	13.5 W 16.5 W
911401541248	SM303C P8S 927 PSU MB PLUS	100-242 V 100-254 V 220 to 240 V	8 W
911401541348	SM303C P8S 927 PSU NB PLUS	100-242 V 100-254 V 220 to 240 V	8 W
911401541448	SM303C P8S 927 PSU VWB PLUS	100-242 V 100-254 V 220 to 240 V	8 W
911401541548	SM303C P8S 927 PSU WB PLUS	100-242 V 100-254 V 220 to 240 V	8 W
911401541648	SM303C P8S 930 PSU MB PLUS	100-242 V 100-254 V 220 to 240 V	8 W
911401541748	SM303C P8S 930 PSU NB PLUS	100-242 V 100-254 V 220 to 240 V	8 W
911401541848	SM303C P8S 930 PSU VWB PLUS	100-242 V 100-254 V 220 to 240 V	8 W
911401541948	SM303C P8S 930 PSU WB PLUS	100-242 V 100-254 V 220 to 240 V	8 W
911401542048	SM303C P8S 940 PSU MB PLUS	100-242 V 100-254 V 220 to 240 V	8 W
911401542148	SM303C P8S 940 PSU NB PLUS	100-242 V 100-254 V 220 to 240 V	8 W
911401542248	SM303C P8S 940 PSU VWB PLUS	100-242 V 100-254 V 220 to 240 V	8 W
911401542348	SM303C P8S 940 PSU WB PLUS	100-242 V 100-254 V 220 to 240 V	8 W
911401542448	SM303C P8S 950 PSU MB PLUS	100-242 V 100-254 V 220 to 240 V	8 W
911401542548	SM303C P8S 950 PSU NB PLUS	100-242 V 100-254 V 220 to 240 V	8 W
911401542648	SM303C P8S 950 PSU VWB PLUS	100-242 V 100-254 V 220 to 240 V	8 W
911401542748	SM303C P8S 950 PSU WB PLUS	100-242 V 100-254 V 220 to 240 V	8 W
911401584212	SM303C P6S 940 PSU WB	200 to 240 V	5.4 W 6.6 W
911401584312	SM303C P6S 940 PSU VWB	200 to 240 V	5.4 W 6.6 W

Order Code	Full Product Name	Input Voltage	Power Consumption
911401584512	SM303C P6S 950 PSU MB	200 to 240 V	5.4 W 6.6 W
911401587412	SM303C P9S 930 PSU WB	200 to 240 V	8.1 W 9.9 W
911401588212	SM303C P9S 940 PSU WB	200 to 240 V	8.1 W 9.9 W
911401507422	SM303C P20 930 PSU WB	200 to 240 V	18 W 22 W
911401508122	SM303C P20 940 PSU MB	200 to 240 V	18 W 22 W
911401508222	SM303C P20 940 PSU WB	200 to 240 V	18 W 22 W
911401508322	SM303C P20 940 PSU VWB	200 to 240 V	18 W 22 W
911401508848	SM303C P20 927 PSU MB PLUS	100-242 V 100-254 V 220 to 240 V	20 W
911401508948	SM303C P20 927 PSU NB PLUS	100-242 V 100-254 V 220 to 240 V	20 W
911401509048	SM303C P20 927 PSU VWB PLUS	100-242 V 100-254 V 220 to 240 V	20 W
911401509148	SM303C P20 927 PSU WB PLUS	100-242 V 100-254 V 220 to 240 V	20 W
911401509248	SM303C P20 930 PSU MB PLUS	100-242 V 100-254 V 220 to 240 V	20 W
911401509348	SM303C P20 930 PSU NB PLUS	100-242 V 100-254 V 220 to 240 V	20 W
911401509448	SM303C P20 930 PSU VWB PLUS	100-242 V 100-254 V 220 to 240 V	20 W
911401509548	SM303C P20 930 PSU WB PLUS	100-242 V 100-254 V 220 to 240 V	20 W
911401509648	SM303C P20 940 PSU MB PLUS	100-242 V 100-254 V 220 to 240 V	20 W
911401509748	SM303C P20 940 PSU NB PLUS	100-242 V 100-254 V 220 to 240 V	20 W
911401509848	SM303C P20 940 PSU VWB PLUS	100-242 V 100-254 V 220 to 240 V	20 W
911401509948	SM303C P20 940 PSU WB PLUS	100-242 V 100-254 V 220 to 240 V	20 W
911401510048	SM303C P20 950 PSU MB PLUS	100-242 V 100-254 V 220 to 240 V	20 W
911401510148	SM303C P20 950 PSU NB PLUS	100-242 V 100-254 V 220 to 240 V	20 W
911401547832	SM303C P20 950 PSU WB	220-240 V	20 W

Order Code	Full Product Name	Input Voltage	Power Consumption
911401539648	SM303C P8 927 PSU MB PLUS	100-242 V 100-254 V 220 to 240 V	8 W
911401539748	SM303C P8 927 PSU NB PLUS	100-242 V 100-254 V 220 to 240 V	8 W
911401539848	SM303C P8 927 PSU VWB PLUS	100-242 V 100-254 V 220 to 240 V	8 W
911401539948	SM303C P8 927 PSU WB PLUS	100-242 V 100-254 V 220 to 240 V	8 W
911401540048	SM303C P8 930 PSU MB PLUS	100-242 V 100-254 V 220 to 240 V	8 W
911401540148	SM303C P8 930 PSU NB PLUS	100-242 V 100-254 V 220 to 240 V	8 W
911401540248	SM303C P8 930 PSU VWB PLUS	100-242 V 100-254 V 220 to 240 V	8 W
911401540348	SM303C P8 930 PSU WB PLUS	100-242 V 100-254 V 220 to 240 V	8 W
911401540448	SM303C P8 940 PSU MB PLUS	100-242 V 100-254 V 220 to 240 V	8 W
911401540548	SM303C P8 940 PSU NB PLUS	100-242 V 100-254 V 220 to 240 V	8 W
911401540648	SM303C P8 940 PSU VWB PLUS	100-242 V 100-254 V 220 to 240 V	8 W
911401540748	SM303C P8 940 PSU WB PLUS	100-242 V 100-254 V 220 to 240 V	8 W
911401540848	SM303C P8 950 PSU MB PLUS	100-242 V 100-254 V 220 to 240 V	8 W
911401540948	SM303C P8 950 PSU NB PLUS	100-242 V 100-254 V 220 to 240 V	8 W
911401541048	SM303C P8 950 PSU VWB PLUS	100-242 V 100-254 V 220 to 240 V	8 W
911401541148	SM303C P8 950 PSU WB PLUS	100-242 V 100-254 V 220 to 240 V	8 W
911401574912	SM303C P6 927 PSU MB	200 to 240 V	5.4 W 6.6 W
911401575112	SM303C P6 927 PSU VWB	200 to 240 V	5.4 W 6.6 W
911401575512	SM303C P6 930 PSU VWB	200 to 240 V	5.4 W 6.6 W
911401576312	SM303C P6 940 PSU VWB	200 to 240 V	5.4 W 6.6 W

Order Code	Full Product Name	Input Voltage	Power Consumption
911401579412	SM303C P9 930 PSU WB	200 to 240 V	8.1 W 9.9 W
911401579512	SM303C P9 930 PSU VWB	200 to 240 V	8.1 W 9.9 W
911401580312	SM303C P9 940 PSU VWB	200 to 240 V	8.1 W 9.9 W

Controls and Dimming

Order Code	Full Product Name	Dimmable
911401513348	SP303P P8 927 PSU MB PLUS	Fixed
911401513448	SP303P P8 927 PSU NB PLUS	Fixed
911401513548	SP303P P8 927 PSU VWB PLUS	Fixed
911401513648	SP303P P8 927 PSU WB PLUS	Fixed
911401513748	SP303P P8 930 PSU MB PLUS	Fixed
911401513848	SP303P P8 930 PSU NB PLUS	Fixed
911401513948	SP303P P8 930 PSU VWB PLUS	Fixed
911401514048	SP303P P8 930 PSU WB PLUS	Fixed
911401514148	SP303P P8 940 PSU MB PLUS	Fixed
911401514248	SP303P P8 940 PSU NB PLUS	Fixed
911401514348	SP303P P8 940 PSU VWB PLUS	Fixed
911401514448	SP303P P8 940 PSU WB PLUS	Fixed
911401514548	SP303P P8 950 PSU MB PLUS	Fixed
911401514648	SP303P P8 950 PSU NB PLUS	Fixed
911401514748	SP303P P8 950 PSU VWB PLUS	Fixed
911401514848	SP303P P8 950 PSU WB PLUS	Fixed
911401596012	SP303P P9 940 PSU NB	No
911401596612	SP303P P9 950 PSU WB	No
911401599212	SP303P P6S 930 PSU NB	No
911401599412	SP303P P6S 930 PSU WB	No
911401504122	SP303P P9S 940 PSU MB	No
911401504322	SP303P P9S 940 PSU VWB	No
911401514948	SP303P P8S 927 PSU MB PLUS	Fixed
911401515048	SP303P P8S 927 PSU NB PLUS	Fixed
911401515148	SP303P P8S 927 PSU VWB PLUS	Fixed
911401515248	SP303P P8S 927 PSU WB PLUS	Fixed
911401515348	SP303P P8S 930 PSU MB PLUS	Fixed
911401515448	SP303P P8S 930 PSU NB PLUS	Fixed
911401515548	SP303P P8S 930 PSU VWB PLUS	Fixed
911401515648	SP303P P8S 930 PSU WB PLUS	Fixed
911401515748	SP303P P8S 940 PSU MB PLUS	Fixed
911401515848	SP303P P8S 940 PSU NB PLUS	Fixed
911401515948	SP303P P8S 940 PSU VWB PLUS	Fixed

Order Code	Full Product Name	Dimmable
911401516048	SP303P P8S 940 PSU WB PLUS	Fixed
911401516148	SP303P P8S 950 PSU MB PLUS	Fixed
911401516248	SP303P P8S 950 PSU NB PLUS	Fixed
911401516348	SP303P P8S 950 PSU VWB PLUS	Fixed
911401516448	SP303P P8S 950 PSU WB PLUS	Fixed
911401510248	SM303C P24 927 PSU MB PLUS	Fixed
911401510348	SM303C P24 927 PSU NB PLUS	Fixed
911401510448	SM303C P24 927 PSU VWB PLUS	Fixed
911401510548	SM303C P24 927 PSU WB PLUS	Fixed
911401510648	SM303C P24 930 PSU MB PLUS	Fixed
911401510748	SM303C P24 930 PSU NB PLUS	Fixed
911401510848	SM303C P24 930 PSU VWB PLUS	Fixed
911401510948	SM303C P24 930 PSU WB PLUS	Fixed
911401511048	SM303C P24 940 PSU MB PLUS	Fixed
911401511148	SM303C P24 940 PSU NB PLUS	Fixed
911401511248	SM303C P24 940 PSU WB PLUS	Fixed
911401511348	SM303C P24 950 PSU MB PLUS	Fixed
911401511448	SM303C P24 950 PSU NB PLUS	Fixed
911401511522	SM303C P24 930 PSU VWB	No
911401511548	SM303C P24 950 PSU VWB PLUS	Fixed
911401511648	SM303C P24 950 PSU WB PLUS	Fixed
911401511748	SM303C P28 927 PSU MB PLUS	Fixed
911401511848	SM303C P28 927 PSU NB PLUS	Fixed
911401511948	SM303C P28 927 PSU VWB PLUS	Fixed
911401512048	SM303C P28 927 PSU WB PLUS	Fixed
911401512148	SM303C P28 930 PSU MB PLUS	Fixed
911401512248	SM303C P28 930 PSU NB PLUS	Fixed
911401512348	SM303C P28 930 PSU VWB PLUS	Fixed
911401512448	SM303C P28 930 PSU WB PLUS	Fixed
911401512548	SM303C P28 940 PSU MB PLUS	Fixed
911401512648	SM303C P28 940 PSU NB PLUS	Fixed
911401512748	SM303C P28 940 PSU VWB PLUS	Fixed
911401512848	SM303C P28 940 PSU WB PLUS	Fixed
911401512948	SM303C P28 950 PSU MB PLUS	Fixed
911401513048	SM303C P28 950 PSU NB PLUS	Fixed
911401513148	SM303C P28 950 PSU VWB PLUS	Fixed
911401513248	SM303C P28 950 PSU WB PLUS	Fixed
911401515222	SM303C P28 930 PSU NB	No
911401516222	SM303C P28 940 PSU WB	No
911401516322	SM303C P28 940 PSU VWB	No
911401547932	SM303C P24 940 PSU VWB	No
911401518022	SM304C P10 930 PSU MB	No

Order Code	Full Product Name	Dimmable
911401518122	SM304C P10 930 PSU WB	No
911401518522	SM304C P10 940 PSU WB	No
911401518722	SM304C P10 950 PSU WB	No
911401520722	SM304C P12 950 PSU WB	No
911401522022	SM304C P15 930 PSU MB	No
911401522122	SM304C P15 930 PSU WB	No
911401522422	SM304C P15 940 PSU MB	No
911401522522	SM304C P15 940 PSU WB	No
911401541248	SM303C P8S 927 PSU MB PLUS	Fixed
911401541348	SM303C P8S 927 PSU NB PLUS	Fixed
911401541448	SM303C P8S 927 PSU VWB PLUS	Fixed
911401541548	SM303C P8S 927 PSU WB PLUS	Fixed
911401541648	SM303C P8S 930 PSU MB PLUS	Fixed
911401541748	SM303C P8S 930 PSU NB PLUS	Fixed
911401541848	SM303C P8S 930 PSU VWB PLUS	Fixed
911401541948	SM303C P8S 930 PSU WB PLUS	Fixed
911401542048	SM303C P8S 940 PSU MB PLUS	Fixed
911401542148	SM303C P8S 940 PSU NB PLUS	Fixed
911401542248	SM303C P8S 940 PSU VWB PLUS	Fixed
911401542348	SM303C P8S 940 PSU WB PLUS	Fixed
911401542448	SM303C P8S 950 PSU MB PLUS	Fixed
911401542548	SM303C P8S 950 PSU NB PLUS	Fixed
911401542648	SM303C P8S 950 PSU VWB PLUS	Fixed
911401542748	SM303C P8S 950 PSU WB PLUS	Fixed
911401584212	SM303C P6S 940 PSU WB	No
911401584312	SM303C P6S 940 PSU VWB	No
911401584512	SM303C P6S 950 PSU MB	No
911401587412	SM303C P9S 930 PSU WB	No
911401588212	SM303C P9S 940 PSU WB	No
911401507422	SM303C P20 930 PSU WB	No
911401508122	SM303C P20 940 PSU MB	No
911401508222	SM303C P20 940 PSU WB	No
911401508322	SM303C P20 940 PSU VWB	No
911401508848	SM303C P20 927 PSU MB PLUS	Fixed
911401508948	SM303C P20 927 PSU NB PLUS	Fixed
911401509048	SM303C P20 927 PSU VWB PLUS	Fixed
911401509148	SM303C P20 927 PSU WB PLUS	Fixed
911401509248	SM303C P20 930 PSU MB PLUS	Fixed
911401509348	SM303C P20 930 PSU NB PLUS	Fixed
911401509448	SM303C P20 930 PSU VWB PLUS	Fixed
911401509548	SM303C P20 930 PSU WB PLUS	Fixed
911401509648	SM303C P20 940 PSU MB PLUS	Fixed

Order Code	Full Product Name	Dimmable
911401509748	SM303C P20 940 PSU NB PLUS	Fixed
911401509848	SM303C P20 940 PSU VWB PLUS	Fixed
911401509948	SM303C P20 940 PSU WB PLUS	Fixed
911401510048	SM303C P20 950 PSU MB PLUS	Fixed
911401510148	SM303C P20 950 PSU NB PLUS	Fixed
911401547832	SM303C P20 950 PSU WB	No
911401539648	SM303C P8 927 PSU MB PLUS	Fixed
911401539748	SM303C P8 927 PSU NB PLUS	Fixed
911401539848	SM303C P8 927 PSU VWB PLUS	Fixed
911401539948	SM303C P8 927 PSU WB PLUS	Fixed
911401540048	SM303C P8 930 PSU MB PLUS	Fixed
911401540148	SM303C P8 930 PSU NB PLUS	Fixed
911401540248	SM303C P8 930 PSU VWB PLUS	Fixed
911401540348	SM303C P8 930 PSU WB PLUS	Fixed
911401540448	SM303C P8 940 PSU MB PLUS	Fixed
911401540548	SM303C P8 940 PSU NB PLUS	Fixed
911401540648	SM303C P8 940 PSU VWB PLUS	Fixed
911401540748	SM303C P8 940 PSU WB PLUS	Fixed
911401540848	SM303C P8 950 PSU MB PLUS	Fixed
911401540948	SM303C P8 950 PSU NB PLUS	Fixed
911401541048	SM303C P8 950 PSU VWB PLUS	Fixed
911401541148	SM303C P8 950 PSU WB PLUS	Fixed
911401574912	SM303C P6 927 PSU MB	No
911401575112	SM303C P6 927 PSU VWB	No
911401575512	SM303C P6 930 PSU VWB	No
911401576312	SM303C P6 940 PSU VWB	No
911401579412	SM303C P9 930 PSU WB	No
911401579512	SM303C P9 930 PSU VWB	No
911401580312	SM303C P9 940 PSU VWB	No

Mechanical and Housing

Order Code	Full Product Name	Housing Color	Mech. impact protection code	Optical cover type
911401513348	SP303P P8 927 PSU MB PLUS	White RAL 9003	IK02	Polycarbonate
911401513448	SP303P P8 927 PSU NB PLUS	White RAL 9003	IK02	Polycarbonate
911401513548	SP303P P8 927 PSU VWB PLUS	White RAL 9003	IK02	Polycarbonate
911401513648	SP303P P8 927 PSU WB PLUS	White RAL 9003	IK02	Polycarbonate
911401513748	SP303P P8 930 PSU MB PLUS	White RAL 9003	IK02	Polycarbonate
911401513848	SP303P P8 930 PSU NB PLUS	White RAL 9003	IK02	Polycarbonate
911401513948	SP303P P8 930 PSU VWB PLUS	White RAL 9003	IK02	Polycarbonate
911401514048	SP303P P8 930 PSU WB PLUS	White RAL 9003	IK02	Polycarbonate
911401514148	SP303P P8 940 PSU MB PLUS	White RAL 9003	IK02	Polycarbonate

Order Code	Full Product Name	Housing Color	Mech. impact protection code	Optical cover type
911401514248	SP303P P8 940 PSU NB PLUS	White RAL 9003	IK02	Polycarbonate
911401514348	SP303P P8 940 PSU VWB PLUS	White RAL 9003	IK02	Polycarbonate
911401514448	SP303P P8 940 PSU WB PLUS	White RAL 9003	IK02	Polycarbonate
911401514548	SP303P P8 950 PSU MB PLUS	White RAL 9003	IK02	Polycarbonate
911401514648	SP303P P8 950 PSU NB PLUS	White RAL 9003	IK02	Polycarbonate
911401514748	SP303P P8 950 PSU VWB PLUS	White RAL 9003	IK02	Polycarbonate
911401514848	SP303P P8 950 PSU WB PLUS	White RAL 9003	IK02	Polycarbonate
911401596012	SP303P P9 940 PSU NB	White	IK03	Acrylate
911401596612	SP303P P9 950 PSU WB	White	IK03	Acrylate
911401599212	SP303P P6S 930 PSU NB	White	IK03	Acrylate
911401599412	SP303P P6S 930 PSU WB	White	IK03	Acrylate
911401504122	SP303P P9S 940 PSU MB	White	IK03	Acrylate
911401504322	SP303P P9S 940 PSU VWB	White	IK03	Acrylate
911401514948	SP303P P8S 927 PSU MB PLUS	White RAL 9003	IK02	Polycarbonate
911401515048	SP303P P8S 927 PSU NB PLUS	White RAL 9003	IK02	Polycarbonate
911401515148	SP303P P8S 927 PSU VWB PLUS	White RAL 9003	IK02	Polycarbonate
911401515248	SP303P P8S 927 PSU WB PLUS	White RAL 9003	IK02	Polycarbonate
911401515348	SP303P P8S 930 PSU MB PLUS	White RAL 9003	IK02	Polycarbonate
911401515448	SP303P P8S 930 PSU NB PLUS	White RAL 9003	IK02	Polycarbonate
911401515548	SP303P P8S 930 PSU VWB PLUS	White RAL 9003	IK02	Polycarbonate
911401515648	SP303P P8S 930 PSU WB PLUS	White RAL 9003	IK02	Polycarbonate
911401515748	SP303P P8S 940 PSU MB PLUS	White RAL 9003	IK02	Polycarbonate
911401515848	SP303P P8S 940 PSU NB PLUS	White RAL 9003	IK02	Polycarbonate
911401515948	SP303P P8S 940 PSU VWB PLUS	White RAL 9003	IK02	Polycarbonate
911401516048	SP303P P8S 940 PSU WB PLUS	White RAL 9003	IK02	Polycarbonate
911401516148	SP303P P8S 950 PSU MB PLUS	White RAL 9003	IK02	Polycarbonate
911401516248	SP303P P8S 950 PSU NB PLUS	White RAL 9003	IK02	Polycarbonate
911401516348	SP303P P8S 950 PSU VWB PLUS	White RAL 9003	IK02	Polycarbonate
911401516448	SP303P P8S 950 PSU WB PLUS	White RAL 9003	IK02	Polycarbonate
911401510248	SM303C P24 927 PSU MB PLUS	White RAL 9003	IK02	Polycarbonate
911401510348	SM303C P24 927 PSU NB PLUS	White RAL 9003	IK02	Polycarbonate
911401510448	SM303C P24 927 PSU VWB PLUS	White RAL 9003	IK02	Polycarbonate
911401510548	SM303C P24 927 PSU WB PLUS	White RAL 9003	IK02	Polycarbonate
911401510648	SM303C P24 930 PSU MB PLUS	White RAL 9003	IK02	Polycarbonate
911401510748	SM303C P24 930 PSU NB PLUS	White RAL 9003	IK02	Polycarbonate
911401510848	SM303C P24 930 PSU VWB PLUS	White RAL 9003	IK02	Polycarbonate
911401510948	SM303C P24 930 PSU WB PLUS	White RAL 9003	IK02	Polycarbonate
911401511048	SM303C P24 940 PSU MB PLUS	White RAL 9003	IK02	Polycarbonate
911401511148	SM303C P24 940 PSU NB PLUS	White RAL 9003	IK02	Polycarbonate
911401511248	SM303C P24 940 PSU WB PLUS	White RAL 9003	IK02	Polycarbonate
911401511348	SM303C P24 950 PSU MB PLUS	White RAL 9003	IK02	Polycarbonate
911401511448	SM303C P24 950 PSU NB PLUS	White RAL 9003	IK02	Polycarbonate

Order Code	Full Product Name	Housing Color	Mech. impact protection code	Optical cover type
911401511522	SM303C P24 930 PSU VWB	White	IK03	Acrylate
911401511548	SM303C P24 950 PSU VWB PLUS	White RAL 9003	IK02	Polycarbonate
911401511648	SM303C P24 950 PSU WB PLUS	White RAL 9003	IK02	Polycarbonate
911401511748	SM303C P28 927 PSU MB PLUS	White RAL 9003	IK02	Polycarbonate
911401511848	SM303C P28 927 PSU NB PLUS	White RAL 9003	IK02	Polycarbonate
911401511948	SM303C P28 927 PSU VWB PLUS	White RAL 9003	IK02	Polycarbonate
911401512048	SM303C P28 927 PSU WB PLUS	White RAL 9003	IK02	Polycarbonate
911401512148	SM303C P28 930 PSU MB PLUS	White RAL 9003	IK02	Polycarbonate
911401512248	SM303C P28 930 PSU NB PLUS	White RAL 9003	IK02	Polycarbonate
911401512348	SM303C P28 930 PSU VWB PLUS	White RAL 9003	IK02	Polycarbonate
911401512448	SM303C P28 930 PSU WB PLUS	White RAL 9003	IK02	Polycarbonate
911401512548	SM303C P28 940 PSU MB PLUS	White RAL 9003	IK02	Polycarbonate
911401512648	SM303C P28 940 PSU NB PLUS	White RAL 9003	IK02	Polycarbonate
911401512748	SM303C P28 940 PSU VWB PLUS	White RAL 9003	IK02	Polycarbonate
911401512848	SM303C P28 940 PSU WB PLUS	White RAL 9003	IK02	Polycarbonate
911401512948	SM303C P28 950 PSU MB PLUS	White RAL 9003	IK02	Polycarbonate
911401513048	SM303C P28 950 PSU NB PLUS	White RAL 9003	IK02	Polycarbonate
911401513148	SM303C P28 950 PSU VWB PLUS	White RAL 9003	IK02	Polycarbonate
911401513248	SM303C P28 950 PSU WB PLUS	White RAL 9003	IK02	Polycarbonate
911401515222	SM303C P28 930 PSU NB	White	IK03	Acrylate
911401516222	SM303C P28 940 PSU WB	White	IK03	Acrylate
911401516322	SM303C P28 940 PSU VWB	White	IK03	Acrylate
911401547932	SM303C P24 940 PSU VWB	White	IK03	Acrylate
911401518022	SM304C P10 930 PSU MB	White	IK03	Acrylate
911401518122	SM304C P10 930 PSU WB	White	IK03	Acrylate
911401518522	SM304C P10 940 PSU WB	White	IK03	Acrylate
911401518722	SM304C P10 950 PSU WB	White	IK03	Acrylate
911401520722	SM304C P12 950 PSU WB	White	IK03	Acrylate
911401522022	SM304C P15 930 PSU MB	White	IK03	Acrylate
911401522122	SM304C P15 930 PSU WB	White	IK03	Acrylate
911401522422	SM304C P15 940 PSU MB	White	IK03	Acrylate
911401522522	SM304C P15 940 PSU WB	White	IK03	Acrylate
911401541248	SM303C P8S 927 PSU MB PLUS	White RAL 9003	IK02	Polycarbonate
911401541348	SM303C P8S 927 PSU NB PLUS	White RAL 9003	IK02	Polycarbonate
911401541448	SM303C P8S 927 PSU VWB PLUS	White RAL 9003	IK02	Polycarbonate
911401541548	SM303C P8S 927 PSU WB PLUS	White RAL 9003	IK02	Polycarbonate
911401541648	SM303C P8S 930 PSU MB PLUS	White RAL 9003	IK02	Polycarbonate
911401541748	SM303C P8S 930 PSU NB PLUS	White RAL 9003	IK02	Polycarbonate
911401541848	SM303C P8S 930 PSU VWB PLUS	White RAL 9003	IK02	Polycarbonate
911401541948	SM303C P8S 930 PSU WB PLUS	White RAL 9003	IK02	Polycarbonate
911401542048	SM303C P8S 940 PSU MB PLUS	White RAL 9003	IK02	Polycarbonate
911401542148	SM303C P8S 940 PSU NB PLUS	White RAL 9003	IK02	Polycarbonate

Order Code	Full Product Name	Housing Color	Mech. impact protection code	Optical cover type
911401542248	SM303C P8S 940 PSU VWB PLUS	White RAL 9003	IK02	Polycarbonate
911401542348	SM303C P8S 940 PSU WB PLUS	White RAL 9003	IK02	Polycarbonate
911401542448	SM303C P8S 950 PSU MB PLUS	White RAL 9003	IK02	Polycarbonate
911401542548	SM303C P8S 950 PSU NB PLUS	White RAL 9003	IK02	Polycarbonate
911401542648	SM303C P8S 950 PSU VWB PLUS	White RAL 9003	IK02	Polycarbonate
911401542748	SM303C P8S 950 PSU WB PLUS	White RAL 9003	IK02	Polycarbonate
911401584212	SM303C P6S 940 PSU WB	White	IK03	Acrylate
911401584312	SM303C P6S 940 PSU VWB	White	IK03	Acrylate
911401584512	SM303C P6S 950 PSU MB	White	IK03	Acrylate
911401587412	SM303C P9S 930 PSU WB	White	IK03	Acrylate
911401588212	SM303C P9S 940 PSU WB	White	IK03	Acrylate
911401507422	SM303C P20 930 PSU WB	White	IK03	Acrylate
911401508122	SM303C P20 940 PSU MB	White	IK03	Acrylate
911401508222	SM303C P20 940 PSU WB	White	IK03	Acrylate
911401508322	SM303C P20 940 PSU VWB	White	IK03	Acrylate
911401508848	SM303C P20 927 PSU MB PLUS	White RAL 9003	IK02	Polycarbonate
911401508948	SM303C P20 927 PSU NB PLUS	White RAL 9003	IK02	Polycarbonate
911401509048	SM303C P20 927 PSU VWB PLUS	White RAL 9003	IK02	Polycarbonate
911401509148	SM303C P20 927 PSU WB PLUS	White RAL 9003	IK02	Polycarbonate
911401509248	SM303C P20 930 PSU MB PLUS	White RAL 9003	IK02	Polycarbonate
911401509348	SM303C P20 930 PSU NB PLUS	White RAL 9003	IK02	Polycarbonate
911401509448	SM303C P20 930 PSU VWB PLUS	White RAL 9003	IK02	Polycarbonate
911401509548	SM303C P20 930 PSU WB PLUS	White RAL 9003	IK02	Polycarbonate
911401509648	SM303C P20 940 PSU MB PLUS	White RAL 9003	IK02	Polycarbonate
911401509748	SM303C P20 940 PSU NB PLUS	White RAL 9003	IK02	Polycarbonate
911401509848	SM303C P20 940 PSU VWB PLUS	White RAL 9003	IK02	Polycarbonate
911401509948	SM303C P20 940 PSU WB PLUS	White RAL 9003	IK02	Polycarbonate
911401510048	SM303C P20 950 PSU MB PLUS	White RAL 9003	IK02	Polycarbonate
911401510148	SM303C P20 950 PSU NB PLUS	White RAL 9003	IK02	Polycarbonate
911401547832	SM303C P20 950 PSU WB	White	IK03	Acrylate
911401539648	SM303C P8 927 PSU MB PLUS	White RAL 9003	IK02	Polycarbonate
911401539748	SM303C P8 927 PSU NB PLUS	White RAL 9003	IK02	Polycarbonate
911401539848	SM303C P8 927 PSU VWB PLUS	White RAL 9003	IK02	Polycarbonate
911401539948	SM303C P8 927 PSU WB PLUS	White RAL 9003	IK02	Polycarbonate
911401540048	SM303C P8 930 PSU MB PLUS	White RAL 9003	IK02	Polycarbonate
911401540148	SM303C P8 930 PSU NB PLUS	White RAL 9003	IK02	Polycarbonate
911401540248	SM303C P8 930 PSU VWB PLUS	White RAL 9003	IK02	Polycarbonate
911401540348	SM303C P8 930 PSU WB PLUS	White RAL 9003	IK02	Polycarbonate
911401540448	SM303C P8 940 PSU MB PLUS	White RAL 9003	IK02	Polycarbonate
911401540548	SM303C P8 940 PSU NB PLUS	White RAL 9003	IK02	Polycarbonate
911401540648	SM303C P8 940 PSU VWB PLUS	White RAL 9003	IK02	Polycarbonate
911401540748	SM303C P8 940 PSU WB PLUS	White RAL 9003	IK02	Polycarbonate

Order Code	Full Product Name	Housing Color	Mech. impact protection code	Optical cover type
911401540848	SM303C P8 950 PSU MB PLUS	White RAL 9003	IK02	Polycarbonate
911401540948	SM303C P8 950 PSU NB PLUS	White RAL 9003	IK02	Polycarbonate
911401541048	SM303C P8 950 PSU VWB PLUS	White RAL 9003	IK02	Polycarbonate
911401541148	SM303C P8 950 PSU WB PLUS	White RAL 9003	IK02	Polycarbonate
911401574912	SM303C P6 927 PSU MB	White	IK03	Acrylate
911401575112	SM303C P6 927 PSU VWB	White	IK03	Acrylate
911401575512	SM303C P6 930 PSU VWB	White	IK03	Acrylate
911401576312	SM303C P6 940 PSU VWB	White	IK03	Acrylate
911401579412	SM303C P9 930 PSU WB	White	IK03	Acrylate
911401579512	SM303C P9 930 PSU VWB	White	IK03	Acrylate
911401580312	SM303C P9 940 PSU VWB	White	IK03	Acrylate

Approval and Application

Order Code	Full Product Name	CE mark
911401513348	SP303P P8 927 PSU MB PLUS	Yes
911401513448	SP303P P8 927 PSU NB PLUS	Yes
911401513548	SP303P P8 927 PSU VWB PLUS	Yes
911401513648	SP303P P8 927 PSU WB PLUS	Yes
911401513748	SP303P P8 930 PSU MB PLUS	Yes
911401513848	SP303P P8 930 PSU NB PLUS	Yes
911401513948	SP303P P8 930 PSU VWB PLUS	Yes
911401514048	SP303P P8 930 PSU WB PLUS	Yes
911401514148	SP303P P8 940 PSU MB PLUS	Yes
911401514248	SP303P P8 940 PSU NB PLUS	Yes
911401514348	SP303P P8 940 PSU VWB PLUS	Yes
911401514448	SP303P P8 940 PSU WB PLUS	Yes
911401514548	SP303P P8 950 PSU MB PLUS	Yes
911401514648	SP303P P8 950 PSU NB PLUS	Yes
911401514748	SP303P P8 950 PSU VWB PLUS	Yes
911401514848	SP303P P8 950 PSU WB PLUS	Yes
911401596012	SP303P P9 940 PSU NB	No
911401596612	SP303P P9 950 PSU WB	No
911401599212	SP303P P6S 930 PSU NB	No
911401599412	SP303P P6S 930 PSU WB	No
911401504122	SP303P P9S 940 PSU MB	No
911401504322	SP303P P9S 940 PSU VWB	No
911401514948	SP303P P8S 927 PSU MB PLUS	Yes
911401515048	SP303P P8S 927 PSU NB PLUS	Yes
911401515148	SP303P P8S 927 PSU VWB PLUS	Yes
911401515248	SP303P P8S 927 PSU WB PLUS	Yes
911401515348	SP303P P8S 930 PSU MB PLUS	Yes

Order Code	Full Product Name	CE mark
911401515448	SP303P P8S 930 PSU NB PLUS	Yes
911401515548	SP303P P8S 930 PSU VWB PLUS	Yes
911401515648	SP303P P8S 930 PSU WB PLUS	Yes
911401515748	SP303P P8S 940 PSU MB PLUS	Yes
911401515848	SP303P P8S 940 PSU NB PLUS	Yes
911401515948	SP303P P8S 940 PSU VWB PLUS	Yes
911401516048	SP303P P8S 940 PSU WB PLUS	Yes
911401516148	SP303P P8S 950 PSU MB PLUS	Yes
911401516248	SP303P P8S 950 PSU NB PLUS	Yes
911401516348	SP303P P8S 950 PSU VWB PLUS	Yes
911401516448	SP303P P8S 950 PSU WB PLUS	Yes
911401510248	SM303C P24 927 PSU MB PLUS	Yes
911401510348	SM303C P24 927 PSU NB PLUS	Yes
911401510448	SM303C P24 927 PSU VWB PLUS	Yes
911401510548	SM303C P24 927 PSU WB PLUS	Yes
911401510648	SM303C P24 930 PSU MB PLUS	Yes
911401510748	SM303C P24 930 PSU NB PLUS	Yes
911401510848	SM303C P24 930 PSU VWB PLUS	Yes
911401510948	SM303C P24 930 PSU WB PLUS	Yes
911401511048	SM303C P24 940 PSU MB PLUS	Yes
911401511148	SM303C P24 940 PSU NB PLUS	Yes
911401511248	SM303C P24 940 PSU WB PLUS	Yes
911401511348	SM303C P24 950 PSU MB PLUS	Yes
911401511448	SM303C P24 950 PSU NB PLUS	Yes
911401511522	SM303C P24 930 PSU VWB	No
911401511548	SM303C P24 950 PSU VWB PLUS	Yes
911401511648	SM303C P24 950 PSU WB PLUS	Yes
911401511748	SM303C P28 927 PSU MB PLUS	Yes
911401511848	SM303C P28 927 PSU NB PLUS	Yes
911401511948	SM303C P28 927 PSU VWB PLUS	Yes
911401512048	SM303C P28 927 PSU WB PLUS	Yes
911401512148	SM303C P28 930 PSU MB PLUS	Yes
911401512248	SM303C P28 930 PSU NB PLUS	Yes
911401512348	SM303C P28 930 PSU VWB PLUS	Yes
911401512448	SM303C P28 930 PSU WB PLUS	Yes
911401512548	SM303C P28 940 PSU MB PLUS	Yes
911401512648	SM303C P28 940 PSU NB PLUS	Yes
911401512748	SM303C P28 940 PSU VWB PLUS	Yes
911401512848	SM303C P28 940 PSU WB PLUS	Yes
911401512948	SM303C P28 950 PSU MB PLUS	Yes
911401513048	SM303C P28 950 PSU NB PLUS	Yes
911401513148	SM303C P28 950 PSU VWB PLUS	Yes

Order Code	Full Product Name	CE mark
911401513248	SM303C P28 950 PSU WB PLUS	Yes
911401515222	SM303C P28 930 PSU NB	No
911401516222	SM303C P28 940 PSU WB	No
911401516322	SM303C P28 940 PSU VWB	No
911401547932	SM303C P24 940 PSU VWB	No
911401518022	SM304C P10 930 PSU MB	No
911401518122	SM304C P10 930 PSU WB	No
911401518522	SM304C P10 940 PSU WB	No
911401518722	SM304C P10 950 PSU WB	No
911401520722	SM304C P12 950 PSU WB	No
911401522022	SM304C P15 930 PSU MB	No
911401522122	SM304C P15 930 PSU WB	No
911401522422	SM304C P15 940 PSU MB	No
911401522522	SM304C P15 940 PSU WB	No
911401541248	SM303C P8S 927 PSU MB PLUS	Yes
911401541348	SM303C P8S 927 PSU NB PLUS	Yes
911401541448	SM303C P8S 927 PSU VWB PLUS	Yes
911401541548	SM303C P8S 927 PSU WB PLUS	Yes
911401541648	SM303C P8S 930 PSU MB PLUS	Yes
911401541748	SM303C P8S 930 PSU NB PLUS	Yes
911401541848	SM303C P8S 930 PSU VWB PLUS	Yes
911401541948	SM303C P8S 930 PSU WB PLUS	Yes
911401542048	SM303C P8S 940 PSU MB PLUS	Yes
911401542148	SM303C P8S 940 PSU NB PLUS	Yes
911401542248	SM303C P8S 940 PSU VWB PLUS	Yes
911401542348	SM303C P8S 940 PSU WB PLUS	Yes
911401542448	SM303C P8S 950 PSU MB PLUS	Yes
911401542548	SM303C P8S 950 PSU NB PLUS	Yes
911401542648	SM303C P8S 950 PSU VWB PLUS	Yes
911401542748	SM303C P8S 950 PSU WB PLUS	Yes
911401584212	SM303C P6S 940 PSU WB	No
911401584312	SM303C P6S 940 PSU VWB	No
911401584512	SM303C P6S 950 PSU MB	No
911401587412	SM303C P9S 930 PSU WB	No
911401588212	SM303C P9S 940 PSU WB	No
911401507422	SM303C P20 930 PSU WB	No
911401508122	SM303C P20 940 PSU MB	No
911401508222	SM303C P20 940 PSU WB	No
911401508322	SM303C P20 940 PSU VWB	No
911401508848	SM303C P20 927 PSU MB PLUS	Yes
911401508948	SM303C P20 927 PSU NB PLUS	Yes
911401509048	SM303C P20 927 PSU VWB PLUS	Yes

Order Code	Full Product Name	CE mark
911401509148	SM303C P20 927 PSU WB PLUS	Yes
911401509248	SM303C P20 930 PSU MB PLUS	Yes
911401509348	SM303C P20 930 PSU NB PLUS	Yes
911401509448	SM303C P20 930 PSU VWB PLUS	Yes
911401509548	SM303C P20 930 PSU WB PLUS	Yes
911401509648	SM303C P20 940 PSU MB PLUS	Yes
911401509748	SM303C P20 940 PSU NB PLUS	Yes
911401509848	SM303C P20 940 PSU VWB PLUS	Yes
911401509948	SM303C P20 940 PSU WB PLUS	Yes
911401510048	SM303C P20 950 PSU MB PLUS	Yes
911401510148	SM303C P20 950 PSU NB PLUS	Yes
911401547832	SM303C P20 950 PSU WB	No
911401539648	SM303C P8 927 PSU MB PLUS	Yes
911401539748	SM303C P8 927 PSU NB PLUS	Yes
911401539848	SM303C P8 927 PSU VWB PLUS	Yes
911401539948	SM303C P8 927 PSU WB PLUS	Yes
911401540048	SM303C P8 930 PSU MB PLUS	Yes
911401540148	SM303C P8 930 PSU NB PLUS	Yes
911401540248	SM303C P8 930 PSU VWB PLUS	Yes
911401540348	SM303C P8 930 PSU WB PLUS	Yes
911401540448	SM303C P8 940 PSU MB PLUS	Yes
911401540548	SM303C P8 940 PSU NB PLUS	Yes
911401540648	SM303C P8 940 PSU VWB PLUS	Yes
911401540748	SM303C P8 940 PSU WB PLUS	Yes
911401540848	SM303C P8 950 PSU MB PLUS	Yes
911401540948	SM303C P8 950 PSU NB PLUS	Yes
911401541048	SM303C P8 950 PSU VWB PLUS	Yes
911401541148	SM303C P8 950 PSU WB PLUS	Yes
911401574912	SM303C P6 927 PSU MB	No
911401575112	SM303C P6 927 PSU VWB	No
911401575512	SM303C P6 930 PSU VWB	No
911401576312	SM303C P6 940 PSU VWB	No
911401579412	SM303C P9 930 PSU WB	No
911401579512	SM303C P9 930 PSU VWB	No
911401580312	SM303C P9 940 PSU VWB	No

Initial Performance (IEC Compliant)

Order Code	Full Product Name	Luminous flux tolerance
911401513348	SP303P P8 927 PSU MB PLUS	-10% / +10%
911401513448	SP303P P8 927 PSU NB PLUS	-10% / +10%
911401513548	SP303P P8 927 PSU VWB PLUS	-10% / +10%

Order Code	Full Product Name	Luminous flux tolerance
911401513648	SP303P P8 927 PSU WB PLUS	-10% / +10%
911401513748	SP303P P8 930 PSU MB PLUS	-10% / +10%
911401513848	SP303P P8 930 PSU NB PLUS	-10% / +10%
911401513948	SP303P P8 930 PSU VWB PLUS	-10% / +10%
911401514048	SP303P P8 930 PSU WB PLUS	-10% / +10%
911401514148	SP303P P8 940 PSU MB PLUS	-10% / +10%
911401514248	SP303P P8 940 PSU NB PLUS	-10% / +10%
911401514348	SP303P P8 940 PSU VWB PLUS	-10% / +10%
911401514448	SP303P P8 940 PSU WB PLUS	-10% / +10%
911401514548	SP303P P8 950 PSU MB PLUS	-10% / +10%
911401514648	SP303P P8 950 PSU NB PLUS	-10% / +10%
911401514748	SP303P P8 950 PSU VWB PLUS	-10% / +10%
911401514848	SP303P P8 950 PSU WB PLUS	-10% / +10%
911401596012	SP303P P9 940 PSU NB	+/-10%
911401596612	SP303P P9 950 PSU WB	+/-10%
911401599212	SP303P P6S 930 PSU NB	+/-10%
911401599412	SP303P P6S 930 PSU WB	+/-10%
911401504122	SP303P P9S 940 PSU MB	+/-10%
911401504322	SP303P P9S 940 PSU VWB	+/-10%
911401514948	SP303P P8S 927 PSU MB PLUS	-10% / +10%
911401515048	SP303P P8S 927 PSU NB PLUS	-10% / +10%
911401515148	SP303P P8S 927 PSU VWB PLUS	-10% / +10%
911401515248	SP303P P8S 927 PSU WB PLUS	-10% / +10%
911401515348	SP303P P8S 930 PSU MB PLUS	-10% / +10%
911401515448	SP303P P8S 930 PSU NB PLUS	-10% / +10%
911401515548	SP303P P8S 930 PSU VWB PLUS	-10% / +10%
911401515648	SP303P P8S 930 PSU WB PLUS	-10% / +10%
911401515748	SP303P P8S 940 PSU MB PLUS	-10% / +10%
911401515848	SP303P P8S 940 PSU NB PLUS	-10% / +10%
911401515948	SP303P P8S 940 PSU VWB PLUS	-10% / +10%
911401516048	SP303P P8S 940 PSU WB PLUS	-10% / +10%
911401516148	SP303P P8S 950 PSU MB PLUS	-10% / +10%
911401516248	SP303P P8S 950 PSU NB PLUS	-10% / +10%
911401516348	SP303P P8S 950 PSU VWB PLUS	-10% / +10%
911401516448	SP303P P8S 950 PSU WB PLUS	-10% / +10%
911401510248	SM303C P24 927 PSU MB PLUS	-10% / +10%
911401510348	SM303C P24 927 PSU NB PLUS	-10% / +10%
911401510448	SM303C P24 927 PSU VWB PLUS	-10% / +10%
911401510548	SM303C P24 927 PSU WB PLUS	-10% / +10%
911401510648	SM303C P24 930 PSU MB PLUS	-10% / +10%
911401510748	SM303C P24 930 PSU NB PLUS	-10% / +10%
911401510848	SM303C P24 930 PSU VWB PLUS	-10% / +10%

Order Code	Full Product Name	Luminous flux tolerance
911401510948	SM303C P24 930 PSU WB PLUS	-10% / +10%
911401511048	SM303C P24 940 PSU MB PLUS	-10% / +10%
911401511148	SM303C P24 940 PSU NB PLUS	-10% / +10%
911401511248	SM303C P24 940 PSU WB PLUS	-10% / +10%
911401511348	SM303C P24 950 PSU MB PLUS	-10% / +10%
911401511448	SM303C P24 950 PSU NB PLUS	-10% / +10%
911401511522	SM303C P24 930 PSU VWB	+/-10%
911401511548	SM303C P24 950 PSU VWB PLUS	-10% / +10%
911401511648	SM303C P24 950 PSU WB PLUS	-10% / +10%
911401511748	SM303C P28 927 PSU MB PLUS	-10% / +10%
911401511848	SM303C P28 927 PSU NB PLUS	-10% / +10%
911401511948	SM303C P28 927 PSU VWB PLUS	-10% / +10%
911401512048	SM303C P28 927 PSU WB PLUS	-10% / +10%
911401512148	SM303C P28 930 PSU MB PLUS	-10% / +10%
911401512248	SM303C P28 930 PSU NB PLUS	-10% / +10%
911401512348	SM303C P28 930 PSU VWB PLUS	-10% / +10%
911401512448	SM303C P28 930 PSU WB PLUS	-10% / +10%
911401512548	SM303C P28 940 PSU MB PLUS	-10% / +10%
911401512648	SM303C P28 940 PSU NB PLUS	-10% / +10%
911401512748	SM303C P28 940 PSU VWB PLUS	-10% / +10%
911401512848	SM303C P28 940 PSU WB PLUS	-10% / +10%
911401512948	SM303C P28 950 PSU MB PLUS	-10% / +10%
911401513048	SM303C P28 950 PSU NB PLUS	-10% / +10%
911401513148	SM303C P28 950 PSU VWB PLUS	-10% / +10%
911401513248	SM303C P28 950 PSU WB PLUS	-10% / +10%
911401515222	SM303C P28 930 PSU NB	+/-10%
911401516222	SM303C P28 940 PSU WB	+/-10%
911401516322	SM303C P28 940 PSU VWB	+/-10%
911401547932	SM303C P24 940 PSU VWB	+/-10%
911401518022	SM304C P10 930 PSU MB	+/-10%
911401518122	SM304C P10 930 PSU WB	+/-10%
911401518522	SM304C P10 940 PSU WB	+/-10%
911401518722	SM304C P10 950 PSU WB	+/-10%
911401520722	SM304C P12 950 PSU WB	+/-10%
911401522022	SM304C P15 930 PSU MB	+/-10%
911401522122	SM304C P15 930 PSU WB	+/-10%
911401522422	SM304C P15 940 PSU MB	+/-10%
911401522522	SM304C P15 940 PSU WB	+/-10%
911401541248	SM303C P8S 927 PSU MB PLUS	-10% / +10%
911401541348	SM303C P8S 927 PSU NB PLUS	-10% / +10%
911401541448	SM303C P8S 927 PSU VWB PLUS	-10% / +10%
911401541548	SM303C P8S 927 PSU WB PLUS	-10% / +10%

Order Code	Full Product Name	Luminous flux tolerance
911401541648	SM303C P8S 930 PSU MB PLUS	-10% / +10%
911401541748	SM303C P8S 930 PSU NB PLUS	-10% / +10%
911401541848	SM303C P8S 930 PSU VWB PLUS	-10% / +10%
911401541948	SM303C P8S 930 PSU WB PLUS	-10% / +10%
911401542048	SM303C P8S 940 PSU MB PLUS	-10% / +10%
911401542148	SM303C P8S 940 PSU NB PLUS	-10% / +10%
911401542248	SM303C P8S 940 PSU VWB PLUS	-10% / +10%
911401542348	SM303C P8S 940 PSU WB PLUS	-10% / +10%
911401542448	SM303C P8S 950 PSU MB PLUS	-10% / +10%
911401542548	SM303C P8S 950 PSU NB PLUS	-10% / +10%
911401542648	SM303C P8S 950 PSU VWB PLUS	-10% / +10%
911401542748	SM303C P8S 950 PSU WB PLUS	-10% / +10%
911401584212	SM303C P6S 940 PSU WB	+/-10%
911401584312	SM303C P6S 940 PSU VWB	+/-10%
911401584512	SM303C P6S 950 PSU MB	+/-10%
911401587412	SM303C P9S 930 PSU WB	+/-10%
911401588212	SM303C P9S 940 PSU WB	+/-10%
911401507422	SM303C P20 930 PSU WB	+/-10%
911401508122	SM303C P20 940 PSU MB	+/-10%
911401508222	SM303C P20 940 PSU WB	+/-10%
911401508322	SM303C P20 940 PSU VWB	+/-10%
911401508848	SM303C P20 927 PSU MB PLUS	-10% / +10%
911401508948	SM303C P20 927 PSU NB PLUS	-10% / +10%
911401509048	SM303C P20 927 PSU VWB PLUS	-10% / +10%
911401509148	SM303C P20 927 PSU WB PLUS	-10% / +10%
911401509248	SM303C P20 930 PSU MB PLUS	-10% / +10%
911401509348	SM303C P20 930 PSU NB PLUS	-10% / +10%
911401509448	SM303C P20 930 PSU VWB PLUS	-10% / +10%
911401509548	SM303C P20 930 PSU WB PLUS	-10% / +10%
911401509648	SM303C P20 940 PSU MB PLUS	-10% / +10%
911401509748	SM303C P20 940 PSU NB PLUS	-10% / +10%
911401509848	SM303C P20 940 PSU VWB PLUS	-10% / +10%
911401509948	SM303C P20 940 PSU WB PLUS	-10% / +10%
911401510048	SM303C P20 950 PSU MB PLUS	-10% / +10%
911401510148	SM303C P20 950 PSU NB PLUS	-10% / +10%
911401547832	SM303C P20 950 PSU WB	+/-10%
911401539648	SM303C P8 927 PSU MB PLUS	-10% / +10%
911401539748	SM303C P8 927 PSU NB PLUS	-10% / +10%
911401539848	SM303C P8 927 PSU VWB PLUS	-10% / +10%
911401539948	SM303C P8 927 PSU WB PLUS	-10% / +10%
911401540048	SM303C P8 930 PSU MB PLUS	-10% / +10%
911401540148	SM303C P8 930 PSU NB PLUS	-10% / +10%

Order Code	Full Product Name	Luminous flux tolerance
911401540248	SM303C P8 930 PSU VWB PLUS	-10% / +10%
911401540348	SM303C P8 930 PSU WB PLUS	-10% / +10%
911401540448	SM303C P8 940 PSU MB PLUS	-10% / +10%
911401540548	SM303C P8 940 PSU NB PLUS	-10% / +10%
911401540648	SM303C P8 940 PSU VWB PLUS	-10% / +10%
911401540748	SM303C P8 940 PSU WB PLUS	-10% / +10%
911401540848	SM303C P8 950 PSU MB PLUS	-10% / +10%
911401540948	SM303C P8 950 PSU NB PLUS	-10% / +10%
911401541048	SM303C P8 950 PSU VWB PLUS	-10% / +10%
911401541148	SM303C P8 950 PSU WB PLUS	-10% / +10%
911401574912	SM303C P6 927 PSU MB	+/-10%
911401575112	SM303C P6 927 PSU VWB	+/-10%
911401575512	SM303C P6 930 PSU VWB	+/-10%
911401576312	SM303C P6 940 PSU VWB	+/-10%
911401579412	SM303C P9 930 PSU WB	+/-10%
911401579512	SM303C P9 930 PSU VWB	+/-10%
911401580312	SM303C P9 940 PSU VWB	+/-10%

© 2026 Signify Holding. All rights reserved. The information provided herein is subject to change, without notice. Signify does not give any representation or warranty as to the accuracy or completeness of the information included herein and shall not be liable for any action in reliance thereon. The information presented in this document is not intended as any commercial offer and does not form part of any quotation or contract, unless otherwise agreed by Signify. Philips and the Philips Shield Emblem are registered trademarks of Koninklijke Philips N.V.