PHILIPS

BGC401 1150LM 14W 3000K L5 1010 T G

911401767752



UNILinear Flex, 5750 lm, 56 W, 930 warm white, Safety class III

UNILinear Flex is really and excellently waterproof and anti-dust LED strips with professional design to guarantee lighting performance. Thanks to filling with anti-UV polyurethane and processing by irrigation methods sealing glue, it not only ensure high quality of lighting color consistency but also protect products outdoor against from harsh environments outdoors.It's can be used for decoration lighting and guidance lighting outdoors, the higher CRI (80) delivers good performance of lighting in color rendering.

General Information

Driver included	No
Lighting Technology	LED
Value ladder	Performance

Light Technical

Luminous Flux	5,750 lm
Correlated Color Temperature (Nom)	3000 K
Luminous Efficacy (rated) (Nom)	82 lm/W
Color rendering index (CRI)	>90
Light source color	930 warm white

Operating and Electrical

Input Voltage	24 DC V
Line Frequency	- Hz
Power Consumption	56 W
Power Factor (Fraction)	1.0
Connection	Flying leads/wires
Cable	Cable 0.6 m without plug
Protection class IEC	Safety class III

Controls and Dimming

Dimmable	No
Control interface	-
Constant light output	No

Initial Performance (IEC Compliant)

Luminous flux tolerance	-10%,+15%
Initial chromaticity	4 SDCM
Power consumption tolerance	+/-10%

Mechanical and Housing

Housing Material	Silicon rubber
Optical cover material	Silicon rubber
Fixation material	Stainless steel
Housing Color	White
Overall length	10.5 mm
Overall width	5,000 mm
Overall height	10 mm
Dimensions (Height x Width x Depth)	10 x 5000 x 11 mm
Ingress protection code	IP66 [Dust penetration-protected, jet-proof]
Mech. impact protection code	IK04 [0.5 J standard plus]
Optical cover type	Opal
Net Weight (Piece)	0.760 kg

Product Data

Order product name	BGC401 1150LM 14W 3000K L5 1010 T G
Full product name	BGC401 1150LM 14W 3000K L5 1010 T G
Full product code	692382863728600
Order code	911401767752
Material Nr. (12NC)	911401767752
Numerator - Quantity Per Pack	1
EAN/UPC - Product/Case	6923828661830
Numerator - Packs per outer box	10
EAN/UPC - Case	6923828637286

Approval and Application

CE mark	No
Ambient temperature range	-40 to +45 °C

Dimensional drawing

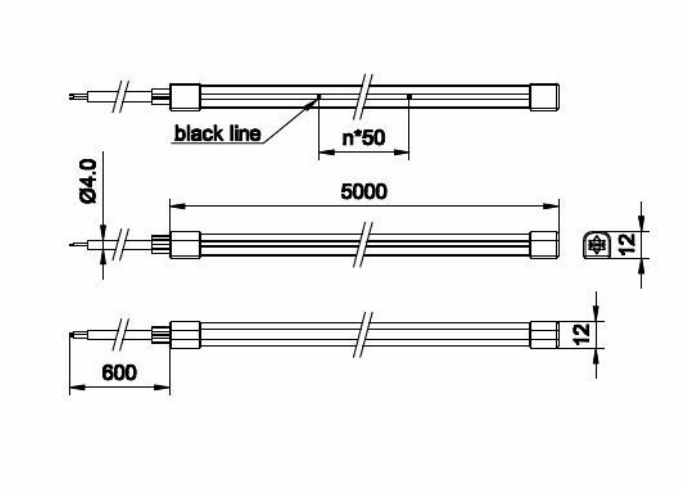

© 2026 Signify Holding. All rights reserved. The information provided herein is subject to change, without notice. Signify does not give any representation or warranty as to the accuracy or completeness of the information included herein and shall not be liable for any action in reliance thereon. The information presented in this document is not intended as any commercial offer and does not form part of any quotation or contract, unless otherwise agreed by Signify. Philips and the Philips Shield Emblem are registered trademarks of Koninklijke Philips N.V.