PHILIPS

31600 Trunklinea Plus LED12/NW L1200 GM

911401869080



Trunklinea Plus, 13 W, 1100 lm, 4000 K

The new Philips Trunklinea Plus offers exceptional value. It is Perfect for your everyday lighting installations. Available in 4 standard sizes and 3 CCTs to provide flexibility to customer. It provide quality light and substantial energy and maintenance savings. This new batten range can be used to replace traditional battens with T5 fluorescent lamps.

General Information

Light source engine type	LED

Light Technical

Luminous Flux	1,100 lm
Correlated Color Temperature (Nom)	4000 K
Luminous Efficacy (rated) (Nom)	80 lm/W
Color rendering index (CRI)	>70
Light source color	740 neutral white

Operating and Electrical

Input Voltage	220 to 240 V
Line Frequency	50 or 60 Hz
Power Consumption	13 W
Power Factor (Fraction)	0.5
Number of products on MCB of 16 A type B	8
Protection class IEC	Safety class II

Controls and Dimming

Dimmable	No
Control interface	-

Mechanical and Housing

Housing Material	Polycarbonate
Optical cover material	Polycarbonate
Housing Color	White
Optical cover finish	Opal
Overall length	1,185 mm
Overall width	21 mm
Overall height	32.3 mm
Dimensions (Height x Width x Depth)	32 x 21 x 1185 mm
Ingress protection code	IP20 [Finger-protected]
Mech. impact protection code	IK02 [0.2 J standard]
Optical cover type	Opal diffuser in polycarbonate cover
Net Weight (Piece)	0.140 kg

Approval and Application

CE mark	No
Ambient temperature range	-20 to +40 °C

Dimensional drawing

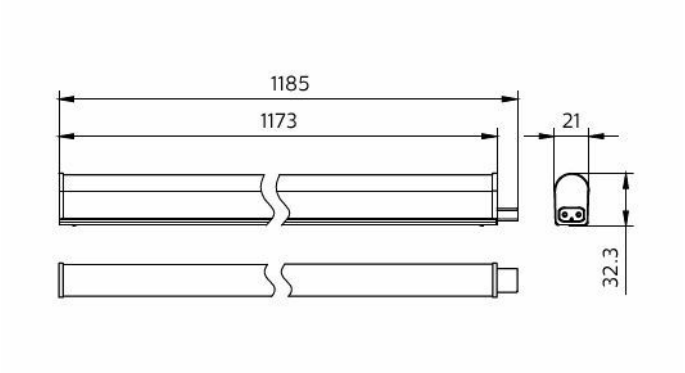

Initial Performance (IEC Compliant)

Luminous flux tolerance	+/-10%
Power consumption tolerance	+/-10%

Product Data

Order product name	31600 Trunklinea Plus LED12/NW L1200 GM
Full product name	31600 Trunklinea Plus LED12/NW L1200 GM
Full product code	871016335548199
Order code	911401869080
Material Nr. (12NC)	911401869080
Numerator - Quantity Per Pack	1
EAN/UPC - Product/Case	8710163355481
Numerator - Packs per outer box	40
EAN/UPC - Case	8710163355726

Related Documents

Documents and certificates	Document Name	Download
Installation Instructions	MI TRUNKLINEA PLUS.pdf	Download

Photometry and lighting design	Document Name	Download
IES File	Trunklinea LED12NW L1200.ies	Download

© 2026 Signify Holding. All rights reserved. The information provided herein is subject to change, without notice. Signify does not give any representation or warranty as to the accuracy or completeness of the information included herein and shall not be liable for any action in reliance thereon. The information presented in this document is not intended as any commercial offer and does not form part of any quotation or contract, unless otherwise agreed by Signify. Philips and the Philips Shield Emblem are registered trademarks of Koninklijke Philips N.V.