PHILIPS

Essential Smartbright IP65 Batten

7474356

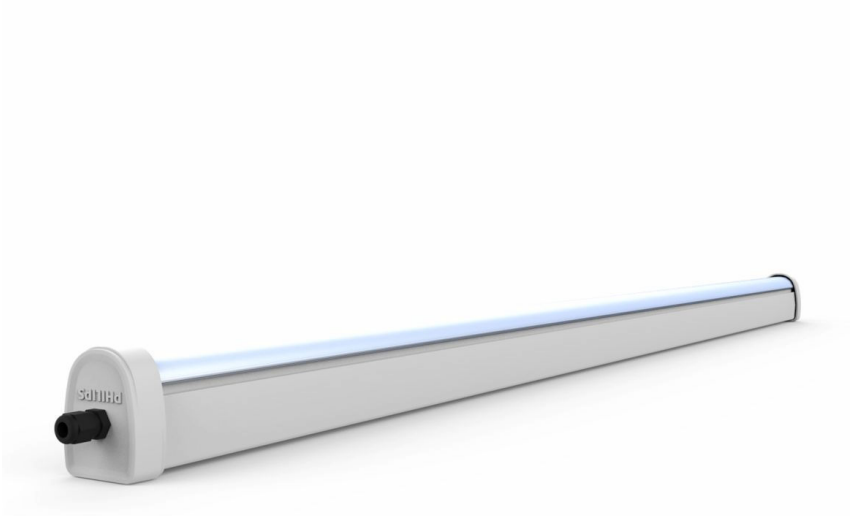

A reliable and professional lighting solution. Perfect Balance between cost & performance!

Whether for a new building or renovation of an existing space, customers want lighting solutions that provide quality of light and substantial energy and maintenance savings. The Essential SmartBright Waterproof is the highly efficient and reliable value for money IP65 LED lighting solution. The luminaire and its components are designed for both indoor and semi-outdoor application (anti-UV PC material housing and diffuser), it is an ideal lighting solution for warehouse, food industry, parking garages, car washers. Beyond that, Essential SmartBright batten comes with class B serviceability and provide reliable performance for 30K hrs.

Benefits

- Full window illumination – deliver comfortable light with excellent uniformity
- Suitable for dusty and humid environment
- Helps users to reduce the ROI with best in class efficiency
- Creates a diffused natural light, ensuring visual comfort
- Easy to install

Applications

- Industry general area
- Food and beverage
- Workshop and assembly line
- Parking areas
- Sideways and other semi outdoor applications

Features

- System efficacy > 120lm/W – Energy saving 55% compared with conventional
- Sleek design comes with superior quality of polycarbonate Co-extrusion with
- Ingress protection-IP65, effectively prevent dusts & moisture from luminaire
- Impact resitant-IK08

- Co-extruded polycarbonate housing
- Suspended & Surface Mounted –Click fix mounting to cater various applications
- Meant for use in Indoor Industrial environment only

Versions

WT150C LED20S



Dimensional drawing

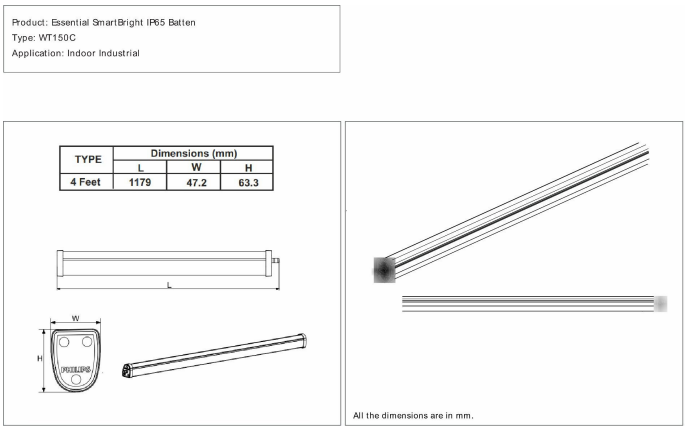

WT150C LED20S

General Information

Driver included	Yes

Light Technical

Luminous Flux	2,100 lm
Luminous Efficacy (rated) (Nom)	130 lm/W
Color rendering index (CRI)	>80
Beam angle of light source	120 degree(s)
Optic type	Beam angle 120°

Operating and Electrical

Input Voltage	140-270 V
Power Consumption	16 W
Protection class IEC	Safety class I

Controls and Dimming

Dimmable	No

Mechanical and Housing

Housing Color	White
Ingress protection code	IP65 [Dust penetration-protected, jet-proof]
Mech. impact protection code	IK08 [5 J vandal-protected]
Optical cover type	Polycarbonate Diffuser

Approval and Application

Flammability mark	For mounting on normally flammable surfaces
Ambient temperature range	0 to +45 °C

Initial Performance (IEC Compliant)

Initial chromaticity	<5

Light Technical

Order Code	Full Product Name	Correlated Color Temperature (Nom)
919515813160	WT150C LED 20S 6500 PSU L120	6500 K
919515813161	WT150C LED 20S 4000 PSU L120	4000 K

© 2026 Signify Holding. All rights reserved. The information provided herein is subject to change, without notice. Signify does not give any representation or warranty as to the accuracy or completeness of the information included herein and shall not be liable for any action in reliance thereon. The information presented in this document is not intended as any commercial offer and does not form part of any quotation or contract, unless otherwise agreed by Signify. Philips and the Philips Shield Emblem are registered trademarks of Koninklijke Philips N.V.