PHILIPS

TCBRLP 46S/940 DIA OC WH401T102 WH

912500108726



signify interact

TCBRPS | Essential Pendant Surface, 3D printed, 34.5 W, D580 mm; H85 mm, 4600 lm, 4000 K, CRI>90, DALI, Interact Ready, UGR19, TP(b)

D580 mm; H85 mm, Polycarbonate, White, Suspended, Dali dimming Interact System ready, 4600 lm, 34.5 W, 133 lm/W, 4000 K, (0.38, 0.38) SDCM < 3, CRI>90, UGR19, Beam angle 90°, Micro-hexagonal optic, Polystyrene, IP20 | Finger-protected, IK04 | 0.5 J standard plus, Safety class II, 2 Push-in connector 5-pole, Feed-through wiring 1-phase, TP(b) diffuser flammability class

General Information

Number of gear units	1 unit
Driver included	Yes
Sustainability rating	Unclassified
Service tag	Yes
Value ladder	Specification
Warranty period	5 years

Light Technical

Luminous Flux	4,600 lm
Correlated Color Temperature (Nom)	4000 K
Luminous Efficacy (rated) (Nom)	133 lm/W
Color rendering index (CRI)	>90
Beam angle of light source	90 degree(s)
Light source color	940 neutral white
Optic type	Beam angle 90°
Luminaire light beam spread	90°
Unified glare rating CEN	19
Indirect glare reduction measure for Display Screen Equipment (EN 12464-2021)	L65≤3000 cd/m²

Operating and Electrical

Input Voltage	220/240 V
Line Frequency	50 to 60 Hz
Inrush current	20.4 A
Inrush time	0.2 ms
Power Consumption	34.5 W
Power Factor (Fraction)	0.9
Connection	2 Push-in connector 5-pole
Cable	-
Number of products on MCB of 16 A type B	24
Suitable for random switching	Yes
Protection class IEC	Safety class II
Feed-through wiring	Feed-through wiring 1-phase

Controls and Dimming

Dimmable	Yes
Driver/power unit/transformer	Dali dimming Interact System ready
Control interface	DALI
Constant light output	No
DALI Standard	DALI-2™ with extended data: Parts 251/252/253
Connectivity	Interact Ready

Mechanical and Housing

Housing Material	Polycarbonate
Reflector material	-
Optic material	Polycarbonate
Optical cover material	Polystyrene
Fixation material	-
Housing Color	White
Optical cover finish	Micro-hexagonal optic
Overall height	85 mm
Overall diameter	580 mm
Ingress protection code	IP20 [Finger-protected]
Mech. impact protection code	IK04 [0.5 J standard plus]
Mounting	Suspended
Net Weight (Piece)	4.000 kg

Emergency Operation

Central Emergency	No

Approval and Application

Glow-wire test	Temperature 650 °C, duration 30 s
Flammability mark	-
CE mark	Yes
ENEC mark	ENEC mark
EU RoHS compliant	Yes
Diffuser Flammability Class	TP(b) diffuser flammability class
Performance ambient temperature Tq	25 °C
Ambient temperature range	+10 to +35 °C

Initial Performance (IEC Compliant)

Luminous flux tolerance	-10% / +10%
Initial chromaticity	(0.38, 0.38) SDCM < 3
Power consumption tolerance	+/-10%

Over Time Performance (IEC Compliant)

Control gear failure rate at median useful life 50000 h	10 %
Lumen maintenance (EN-IEC 62722-2-1) at median useful life* 50000 h	L80
Lumen maintenance (EN-IEC 62722-2-1) at median useful life* 100000 h	L80

Sustainability Data

Repair class	Repair Class C, the driver of this luminaire can be replaced by a service technician. Special care is required during disassembly and reassembly, and specific tools may be required. Parts and documentation are available for a period of time.
Embedded carbon (A1-A3)	85.4 kg CO_2e
Product non-virgin material ratio	14.5 %
Recyclable content ratio of the finished product	49.9 %
GWP total B6 (kg CO2eq) Declared Unit	Please calculate using your local energy mix value: Power Declared Unit (kW) * Service life (hrs) Declared Unit * Energy mix (kg CO2eq / kwh)
GWP total B6 (kg CO2eq) Functional Unit	Please calculate using your local energy mix value: Power Declared Unit (kW) * 1000 (lm) /lumen output (lm) Declared Unit * 35000 (hrs) * Energy mix (kg CO2 eq / kwh)
Non-virgin material ratio of the packaging	Cardboard > 80% recycled
Packaging Recyclable content ratio	Cardboard recycling rate > 80%
Packaging Material	Cardboard

Product Data

Order product name	TCBRLP 46S/940 DIA OC WH401T102 WH
Full product name	TCBRLP 46S/940 DIA OC WH401T102 WH
Full product code	872016986387300
Order code	912500108726
Material Nr. (12NC)	912500108726
Numerator - Quantity Per Pack	1
EAN/UPC - Product/Case	8720169863873
Numerator - Packs per outer box	1
EAN/UPC - Case	8720169863873
Product family code	TCBRPS [Essential Pendant Surface]

Dimensional drawing

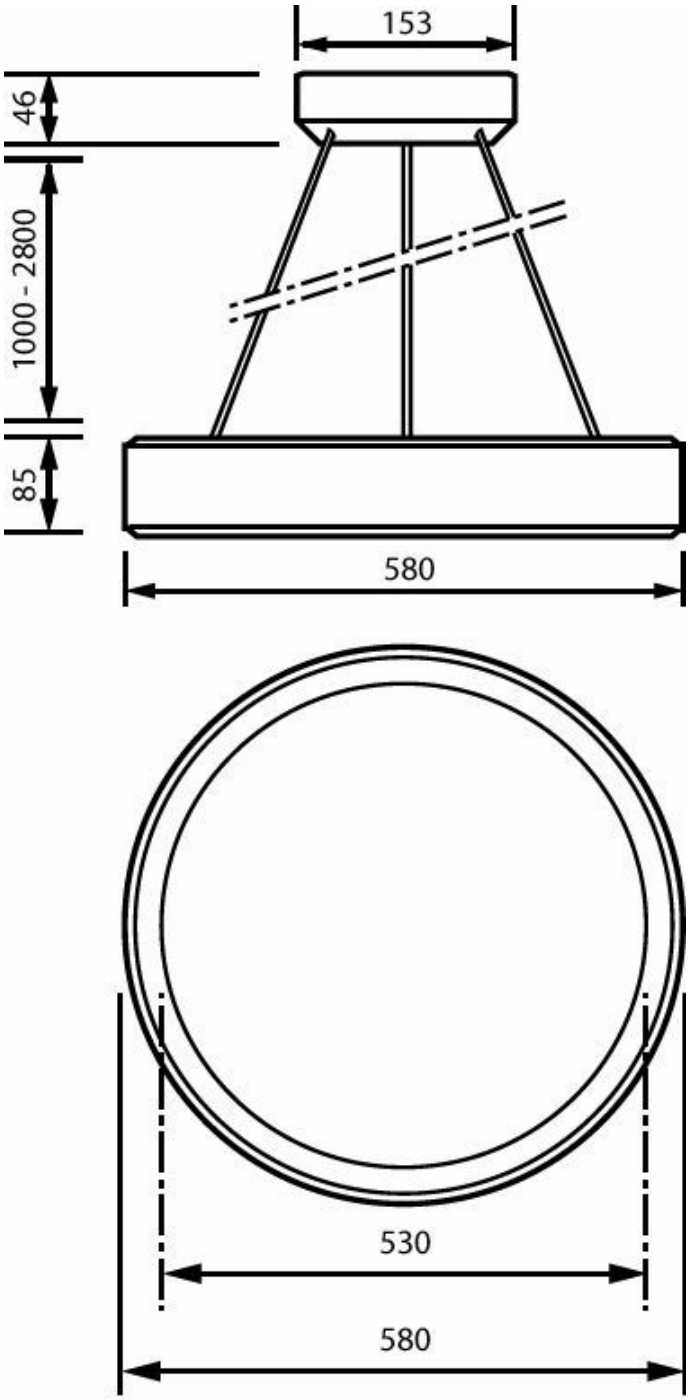

Related Documents

Documents and certificates	Document Name	Download
Installation Instructions	Mounting-instruction-essential-pendant.pdf	Download

Photometry and lighting design	Document Name	Download
IES File	EssentialPendant-TCBR-LP46S940DIAOC.ies	Download

© 2026 Signify Holding. All rights reserved. The information provided herein is subject to change, without notice. Signify does not give any representation or warranty as to the accuracy or completeness of the information included herein and shall not be liable for any action in reliance thereon. The information presented in this document is not intended as any commercial offer and does not form part of any quotation or contract, unless otherwise agreed by Signify. Philips and the Philips Shield Emblem are registered trademarks of Koninklijke Philips N.V.