PHILIPS

RS156B LED12-WB-/830 D68 WIA PI6 WH

911401821984



signify interact

CoreLine Recessed Spot gen2, Adjustable, 12 W, D68 mm, 1300 lm, 3000 K, Wireless, Interact Ready, Wide beam, White, IP20/44

CoreLine Recessed Spot gen2, Adjustable, D68 mm, Aluminum die-cast, White, Recessed, Wireless driver Interact System ready external, 1300 lm, 12 W, 108 lm/W, 3000 K, (0.43, 0.40) SDCM <5, Wide beam, Polycarbonate, IP20/44 | Finger-protected; wire-protected, splash-proof, IK03 | 0.3 J, Safety class II, Cable 0.25 m with connector 3-pole, Push-in connector 3-pole

Warnings and Safety

- The luminaire should be installed and disassembled by a qualified electrician and wired in accordance with the latest IEE electrical regulations or the national requirements, as per the product mounting instructions.

General Information

Light source replaceable	No
Number of gear units	1 unit
Driver included	Yes
Sustainability rating	Unclassified
Service tag	No
Lighting Technology	LED
Value ladder	Performance
Warranty period	5 years

Light Technical

Luminous Flux	1,300 lm
Saturated Red (R9)	<50
Correlated Color Temperature (Nom)	3000 K
Luminous Efficacy (rated) (Nom)	108 lm/W
Color rendering index (CRI)	>80
Beam angle of light source	120 degree(s)
Light source color	830 warm white
Optic type	Wide beam
Luminaire light beam spread	36°
Unified glare rating CEN	33

Operating and Electrical

Input Voltage	220 to 240 V
Line Frequency	50 or 60 Hz
Initial CLO power consumption	- W
Average CLO power consumption	- W
Inrush current	4.9 A
Inrush time	0.056 ms
Power Consumption	12 W
Power Factor (Fraction)	0.9
Connection	Push-in connector 3-pole
Cable	Cable 0.25 m with connector 3-pole
Number of products on MCB of 16 A type B	24
Suitable for random switching	Yes
Protection class IEC	Safety class II
Total harmonic distortion	20 %

Controls and Dimming

Dimmable	Yes
Driver/power unit/transformer	Wireless driver Interact System ready external
Control interface	Wireless
Constant light output	No
Maximum dim level	10% (depends on dimmer, ELV)
Connectivity	Interact Ready

Mechanical and Housing

Housing Material	Aluminum die-cast
Reflector material	-
Optic material	Polycarbonate
Optical cover material	Polycarbonate
Fixation material	Steel
Housing Color	White
Optical cover finish	-
Overall height	62 mm
Overall diameter	85 mm
Nominal Ceiling cut-out diameter	68 mm
Ingress protection code	IP20/44 [Finger-protected; wire-protected, splash-proof]
Mech. impact protection code	IK03 [0.3 J]
Mounting	Recessed
Net Weight (Piece)	0.390 kg

Approval and Application

Glow-wire test	Temperature 650 °C, duration 30 s
Flammability mark	For mounting on normally flammable surfaces
CE mark	Yes
ENEC mark	ENEC mark
Photobiological risk	Photobiological risk group 1 @200mm to EN62778
Photobiological risk specification	0.2 m
EU RoHS compliant	Yes
Performance ambient temperature Tq	25 °C
Flickering value (PstLM) - Flickering value as per EN 61000-3-3	1
Stroboscopic effect visibility measure (SVM)	0.4
Ambient temperature range	0 to +35 °C

Initial Performance (IEC Compliant)

Luminous flux tolerance	+/-10%
Initial chromaticity	(0.43, 0.40) SDCM <5
Power consumption tolerance	+/-10%
Standard Deviation of Colour Matching (McAdam ellipse)	SDCM≤5

Over Time Performance (IEC Compliant)

Control gear failure rate at median useful life 50000 h	5 %
Lumen maintenance (EN-IEC 62722-2-1) at median useful life* 35000 h	-
Lumen maintenance (EN-IEC 62722-2-1) at median useful life* 50000 h	L70
Lumen maintenance (EN-IEC 62722-2-1) at median useful life* 75000 h	-
Lumen maintenance (EN-IEC 62722-2-1) at median useful life* 100000 h	-

Sustainability Data

Repair class	Repair Class D, this product is not designed to be repaired.
Embedded carbon (A1-A3)	12.7 kg CO_2e
Product non-virgin material ratio	11.9 %
Recyclable content ratio of the finished product	44.7 %
GWP total B6 (kg CO2eq) Declared Unit	Please calculate using your local energy mix value: Power Declared Unit (kW) * Service life (hrs) Declared Unit * Energy mix (kg CO2eq / kwh)
GWP total B6 (kg CO2eq) Functional Unit	Please calculate using your local energy mix value: Power Declared Unit (kW) * 1000 (lm) /lumen output (lm) Declared Unit * 35000 (hrs) * Energy mix (kg CO2 eq / kwh)
Non-virgin material ratio of the packaging	Cardboard > 80% recycled
Packaging Recyclable content ratio	Cardboard recycling rate > 80%
Packaging Material	Cardboard

Product Data

Order product name	RS156B LED12-WB-/830 D68 WIA PI6 WH
Full product name	RS156B LED12-WB-/830 D68 WIA PI6 WH
Full product code	871951494093299
Order code	911401821984
Material Nr. (12NC)	911401821984
Numerator - Quantity Per Pack	1
EAN/UPC - Product/Case	8719514940932
Numerator - Packs per outer box	18
EAN/UPC - Case	8719514941328

Dimensional drawing

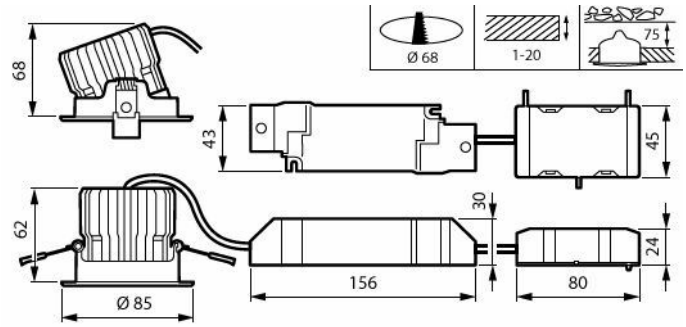

Polar normal diagrams

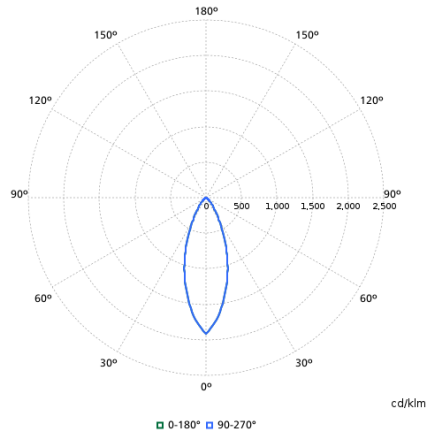

Related Documents

Documents and certificates	Document Name	Download
Installation Instructions	127075007957_CoreLine Recessed Spot gen2_D68-1200lm WIA_manual-A4.pdf	Download
Environmental Product Declaration	EPD-Philips-CoreLine-Recessed-Spot-gen2-RS156B-LED12-WB-830-D68-WIA-PI6-WH-911401821984.pdf	Download

Photometry and lighting design	Document Name	Download
IES File	rs156b-led12-wb-830-d68-wia-pi6-wh-911401821984.ies	Download
LDT File	rs156b-led12-wb-830-d68-wia-pi6-wh-911401821984.ldt	Download
ROLF File	rs156b-led12-wb-830-d68-wia-pi6-wh-911401821984.rolfz	Download
ULD File	rs156b-led12-wb-830-d68-wia-pi6-wh-911401821984.uld	Download
Revit file	rs156b-led12-wb-830-d68-wia-pi6-wh-911401821984.zip	Download

© 2026 Signify Holding. All rights reserved. The information provided herein is subject to change, without notice. Signify does not give any representation or warranty as to the accuracy or completeness of the information included herein and shall not be liable for any action in reliance thereon. The information presented in this document is not intended as any commercial offer and does not form part of any quotation or contract, unless otherwise agreed by Signify. Philips and the Philips Shield Emblem are registered trademarks of Koninklijke Philips N.V.