PHILIPS

UV-B Narrowband PL-L/PL-S

XUM01PL



UVB PL-L/PL-S - Efficient & compact UVB NB lamps

Philips offers highly reliable PL-L & PL-S lamps with narrow waveband of between 305 and 315 nm which peaks at 311 nm. This makes these lamps suitable for various applications such as phototherapy, agriculture & curing.

Benefits

- High efficiency - generating high UVB narrowband power in relation to incoming power
- Shorter period of exposure and less erythemal radiation than conventional UVB lamps

Applications

- Agriculture
- Phototherapy
- Curing

Features

- Emission peak at 311 nm
- Narrowband
- Special developed phosphor and glass
- A lamp breaking is extremely unlikely to have any impact on your health. If a lamp breaks, ventilate the room for 30 minutes and remove the parts, preferably with gloves. Put them in a sealed plastic bag and take it to your local waste facilities for recycling. Do not use a vacuum cleaner.
- Photobiological safety – IEC 62471 - Risk Group 3. WARNING - UV emitted from these products.

Versions



LPPR PLS4PLM 9W



XPPR_XUVBPLL_2G11_4P-
Product photo



XPPR XUVBPLS 0001

Dimensional drawing

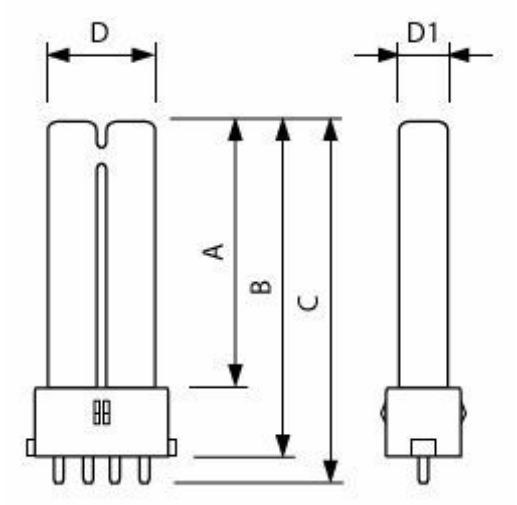

Product	D1 (max)	D (max)	A (max)	B (max)	C (max)
PL-S 8W/01/4P 1CT/6X10BOX	13 mm	28 mm	128 mm	145 mm	151.1 mm

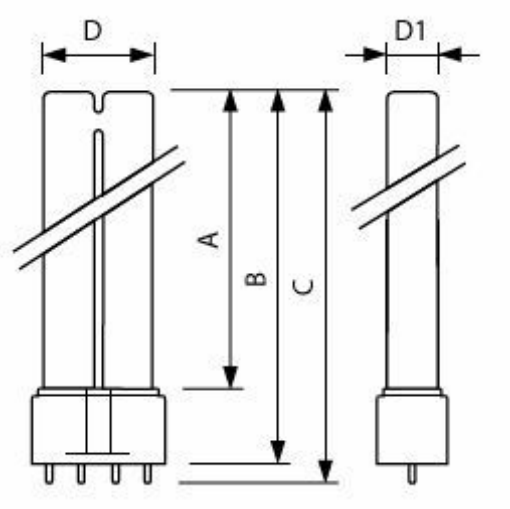

Product	D1 (max)	D (max)	A (max)	B (max)	C (max)
PL-L 36W/01/4P 1CT/25	18 mm	39 mm	384.2 mm	410 mm	416.6 mm
PL-L 36W/01/4P 1CT/25	18 mm	39 mm	384.2 mm	410 mm	416.6 mm

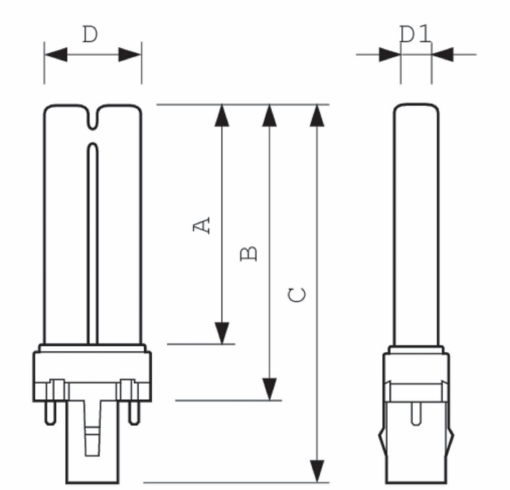

Product	D1 (max)	D (max)	A (max)	B (max)	C (max)
PL-S 9W/01/2P 1CT/6X10BOX	13 mm	28 mm	129 mm	144.5 mm	167 mm

Light Technical

Color Code	01
Color Designation	Ultra Violet B

Controls and Dimming

Dimmable	No

Approval and Application

Mercury (Hg) Content (Max)	3.2 mg

General Information

Order Code	Full Product Name	Cap-Base
927912900121	PL-S 8W/01/4P 1CT/6X10BOX	2G7
927903400121	PL-L 36W/01/4P 1CT/25	2G11
927903400151	PL-L 36W/01/4P 1CT/25	2G11
927901700121	PL-S 9W/01/2P 1CT/6X10BOX	G23

Operating and Electrical

Order Code	Full Product Name	Power Consumption	Lamp Current (Nom)
927912900121	PL-S 8W/01/4P 1CT/6X10BOX	8.0 W	0.165 A
927903400121	PL-L 36W/01/4P 1CT/25	36 W	0.435 A
927903400151	PL-L 36W/01/4P 1CT/25	36 W	0.435 A
927901700121	PL-S 9W/01/2P 1CT/6X10BOX	8.6 W	0.17 A

Mechanical and Housing

Order Code	Full Product Name	Bulb Shape
927912900121	PL-S 8W/01/4P 1CT/6X10BOX	2XT12
927903400121	PL-L 36W/01/4P 1CT/25	2xT16
927903400151	PL-L 36W/01/4P 1CT/25	2xT16
927901700121	PL-S 9W/01/2P 1CT/6X10BOX	2XT12

Approval and Application

Order Code	Full Product Name	Mercury (Hg) Content (Nom)
927912900121	PL-S 8W/01/4P 1CT/6X10BOX	3.0 mg
927903400121	PL-L 36W/01/4P 1CT/25	4.4 mg
927903400151	PL-L 36W/01/4P 1CT/25	4.4 mg
927901700121	PL-S 9W/01/2P 1CT/6X10BOX	3.0 mg

© 2026 Signify Holding. All rights reserved. The information provided herein is subject to change, without notice. Signify does not give any representation or warranty as to the accuracy or completeness of the information included herein and shall not be liable for any action in reliance thereon. The information presented in this document is not intended as any commercial offer and does not form part of any quotation or contract, unless otherwise agreed by Signify. Philips and the Philips Shield Emblem are registered trademarks of Koninklijke Philips N.V.