PHILIPS

## RS350 G2 SF Sq L80 7W 30K 24D 1H

929003225010



# Deep Recessed Spotlight, 7 W, 540 lm, 3000 K, Beam angle 24°, White

Aluminum die-cast, White, Power supply unit (On/Off), 540 lm, 7 W, 77 lm/W, 3000 K, (( , 0.4369 ,, 0.404 )) 5SDCM, Beam angle 24°, Clear, Polycarbonate, IP20 | Finger-protected, IK03 | 0.3 J, Safety class II, Flying leads/wires

### General Information

| | |
|---|---|
| Light source replaceable | No |
| Number of gear units | 70 units |
| Driver included | Yes |
| Switching Cycle | 15,000 |
| Lighting Technology | LED |
| Warranty period | 1 years |

### Light Technical

| | |
|---|---|
| Luminous Flux | 540 lm |
| Correlated Color Temperature (Nom) | 3000 K |
| Luminous Efficacy (rated) (Nom) | 77 lm/W |
| Color rendering index (CRI) | 90 |
| Light source color | 930 warm white |
| Optic type | Beam angle 24° |
| Luminaire light beam spread | 24° |

## Operating and Electrical

| | |
|---|---|
| Input Voltage | 220 to 240 V |
| Line Frequency | 50 or 60 Hz |
| Input Frequency | 50 or 60 Hz |
| Inrush current | 8.5 A |
| Inrush time | 0.18 ms |
| Power Consumption | 7 W |
| Power Factor (Fraction) | 0.5 |
| Connection | Flying leads/wires |
| Cable | Cable 0.7 m without plug |
| Number of products on MCB of 16 A type B | 110 |
| Suitable for random switching | No |
| Protection class IEC | Safety class II |

## Controls and Dimming

| | |
|---|---|
| Dimmable | No |
| Driver/power unit/transformer | Power supply unit (On/Off) |
| Constant light output | No |

## Mechanical and Housing

| | |
|---|---|
| Housing Material | Aluminum die-cast |
| Reflector material | Polycarbonate aluminum coated |
| Optic material | Polycarbonate |
| Optical cover material | Polycarbonate |
| Fixation material | Steel |
| Housing Color | White |
| Optical cover finish | Clear |
| Overall length | 80 mm |
| Overall width | 80 mm |
| Overall height | 125 mm |
| Dimensions (Height x Width x Depth) | 125 x 80 x 80 mm |
| Ingress protection code | IP20 [Finger-protected] |
| Mech. impact protection code | IK03 [0.3 J] |
| Net Weight (Piece) | 0.430 kg |

## Approval and Application

| | |
|---|---|
| Glow-wire test | Temperature 650 °C, duration 30 s |
| Flammability mark | For mounting on normally flammable surfaces |
| EU RoHS compliant | Yes |
| EyeComfort | Yes |
| Ambient temperature range | -20 to +40 °C |

## Initial Performance (IEC Compliant)

| | |
|---|---|
| Luminous flux tolerance | +/-10% |
| Initial chromaticity | 《 , 0.4369 ， , 0.404 》5SDCM |
| Power consumption tolerance | +/-10% |

## Over Time Performance (IEC Compliant)

| | |
|---|---|
| Driver failure rate at 5000 h | 0.015 % |
| Median useful life L70B50 | 25,000 hour(s) |

## Product Data

| | |
|---|---|
| Order product name | RS350 G2 SF Sq L80 7W 30K 24D 1H |
| Full product name | RS350 G2 SF Sq L80 7W 30K 24D 1H |
| Full product code | 694783048521500 |
| Order code | 929003225010 |
| Material Nr. (12NC) | 929003225010 |
| Numerator - Quantity Per Pack | 1 |
| EAN/UPC - Product/Case | 6947830485215 |
| Numerator - Packs per outer box | 12 |
| EAN/UPC - Case | 6947830485222 |

## Dimensional drawing

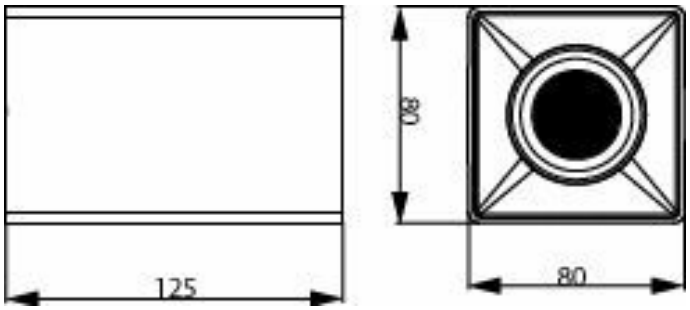


## Photometric data

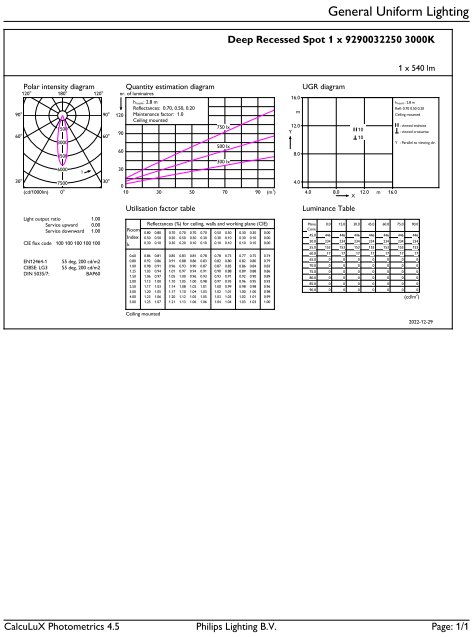
General Uniform Lighting

Deep Recessed Spot 1 x 9290032250 3000K

1 x 540 lm

Polar intensity diagram

Quantity estimation diagram

UGR diagram

Utilisation factor table

Luminance Table

CalcuLuX Photometrics 4.5 Philips Lighting B.V. Page: 1/1

General uniform lighting - RS350 G2 SF Sq L80 7W 30K 24D 1H

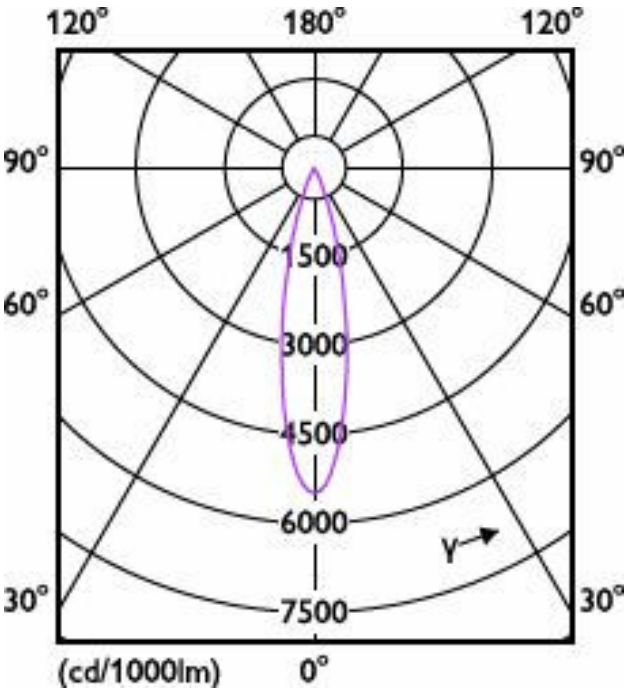


Light Distribution Diagram - RS350 G2 SF Sq L80 7W 30K 24D 1H

## Related Documents

| Documents and certificates | Document Name | Download |
|---|---|---|
| Installation Instructions | 65986751_485130_LEDLR_SF_L80-INI.pdf | Download |

| Photometry and lighting design | Document Name | Download |
|---|---|---|
| IES File | RS350_G2_SF_SQ_L80_7W_30K_24D_1H-IES.ies | Download |

© 2026 Signify Holding. All rights reserved. The information provided herein is subject to change, without notice. Signify does not give any representation or warranty as to the accuracy or completeness of the information included herein and shall not be liable for any action in reliance thereon. The information presented in this document is not intended as any commercial offer and does not form part of any quotation or contract, unless otherwise agreed by Signify. Philips and the Philips Shield Emblem are registered trademarks of Koninklijke Philips N.V.