PHILIPS

HF-Performer II for PL-T/C/R/L/TL5C lamps

HFPIIPLC



An energy-efficient solution

HF-Performer EII PL-T/C/R/T5c is a sustainable, slim and high-frequency electronic ballast for a wide range of CFL- ni applications. It is ideal for applications where high energy efficiency is required. The HF-Performer EII range has a robust design, meets all relevant international safety and performance standards and is energy-efficient (CELMA EEI A2). The ballast is primarily designed for Indoor application. For outdoor application, the luminaire should be minimum Classland need to be sufficiently protected against water & dust. The installation should also be guard against any lightening surge or any other necessary electrical protection as deemed in such typical installation & application.

Benefits

- Robust design that meets all relevant international safety and performance standards and ensures good energy efficiency
- Automatic restart (after voltage dip or lamp exchange) ensures easy operation and hassle-free re-lamping
- Suitable for DC emergency operation, 186 to 275 V (at -10 oC) and in line with IEC/EN 60598-2-22 luminaire norms

Applications

- Ideal for commercial indoor lighting applications where it is necessary to reduce the wattage per square meter or operating costs
- Used with movement-detection control systems like Philips OccuPlus

- Mainly for indoor applications such as spotlights, downlights and recessed fixtures used largely in retail stores, office buildings, supermarkets, hotels, convenience stores
- Industrial premises with long operating hours
- Active power factor correction to ensure constant light, irrespective of mains-voltage fluctuations
- The unit is protected against excessive mains voltage and incorrect connections.

Features

- 50,000-hour lifetime at maximum case temperature, combined with over 60,000 on/off switches on one lamp
- Programmed, flicker-free, pre-heated start (< 1.5 s) which allows the lamp to be switched on and off without reducing useful lamp life

Versions



GPPR PPLTCL5 PHL 0001

Dimensional drawing

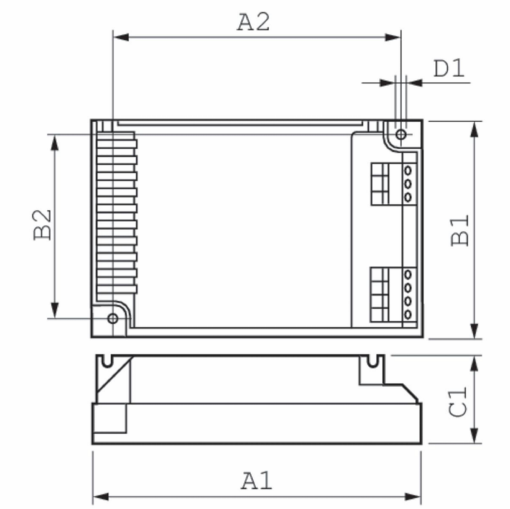

Product	D1	C1	A1	A2	B1	B2
HF-P 1 22-42 PL-T/C/L/TL5C EII 220-240V	4.5 mm	30.0 mm	103.0 mm	93.5 mm	67.0 mm	57.5 mm
HF-P 2 22-42 PL-T/C/L/TL5C EII 220-240V	4.5 mm	30.0 mm	103.0 mm	93.5 mm	67.0 mm	57.5 mm

Operating and Electrical

Input Voltage	220 to 240 V
Line Frequency	50 to 60 Hz
Input Frequency	50 to 60 Hz

Approval and Application

Energy Efficiency Index	A2

Operating and Electrical

Order Code	Full Product Name	Number of Products on MCB (16A Type B) (Nom)
913700630766	HF-P 1 22-42 PL-T/C/L/TL5C EII 220-240V	28
913700630866	HF-P 2 22-42 PL-T/C/L/TL5C EII 220-240V	12

© 2026 Signify Holding. All rights reserved. The information provided herein is subject to change, without notice. Signify does not give any representation or warranty as to the accuracy or completeness of the information included herein and shall not be liable for any action in reliance thereon. The information presented in this document is not intended as any commercial offer and does not form part of any quotation or contract, unless otherwise agreed by Signify. Philips and the Philips Shield Emblem are registered trademarks of Koninklijke Philips N.V.