PHILIPS

Greenspace Flex

RS378B



It delivers super flexibility, complete product range and seamlessly system integration to Hospitality customers..

GreenSpace Flex is performance portfolio dedicated to Hospitality segment for GC/GM countries. With modular design concept, the light engines and different trims could have multiply of combination to satisfy diversified customer’s requirement.

Benefits

- Complete portfolio covering from 400lm to 3000lm, 3CCT and 3 beam angles.
- Super flexibility with modular design, and different trims to suit different application.
- Smart connectivity to seamlessly integration with Interact Hospitality.
- Deep recess for visual comfort
- Easy installation and maintenance

Applications

- Guest room
- Bath room
- Corridor
- Lobby

Features

- 6w ~42w (400lm~3200lm)
- CRI 90, SDCM <3
- Beam Angle: NB, MB, WB
- CCT: 2700K, 3000K, 4000K
- High reliability, 50Khrs (L80B50@25°C)

Versions



RS378B P11 M55



Greenspace Flex RS378B P6&P11 M55



Greenspace Flex RS378B P42 M102



RS378B P6 M55



RS378B P24 M70



RS378B P33 M87



RS378B P42 M102



Greenspace Flex, Prof GCGM



Greenspace Flex, Prof GCGM



RS378B P15 M55



RS378B P6 M43



Greenspace Flex RS378B P15 M55

Dimensional drawing

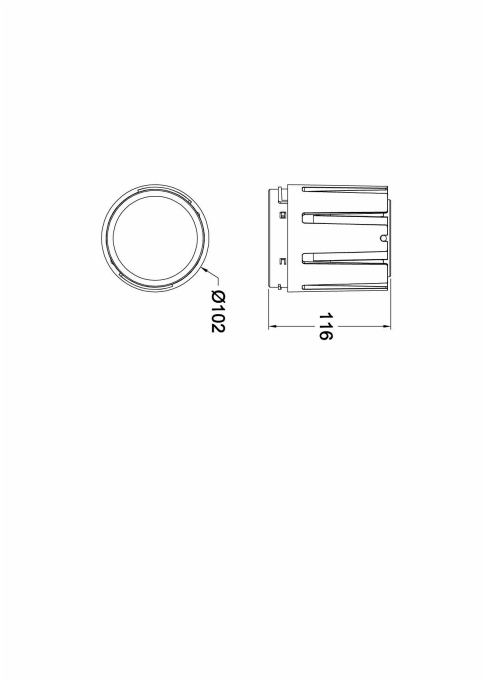

RS378B P42 930 PSU-E NB M102

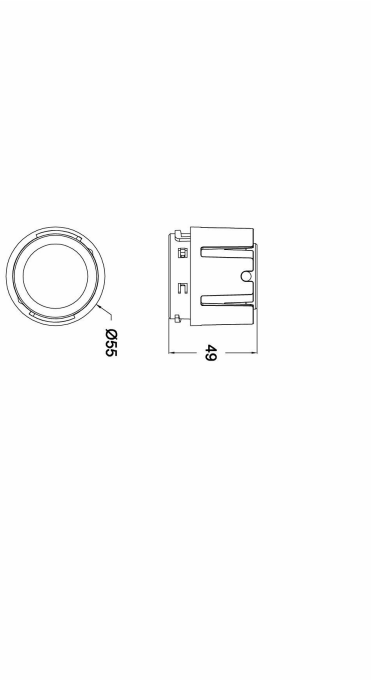

RS378B P11 930 PSU-E MB M55

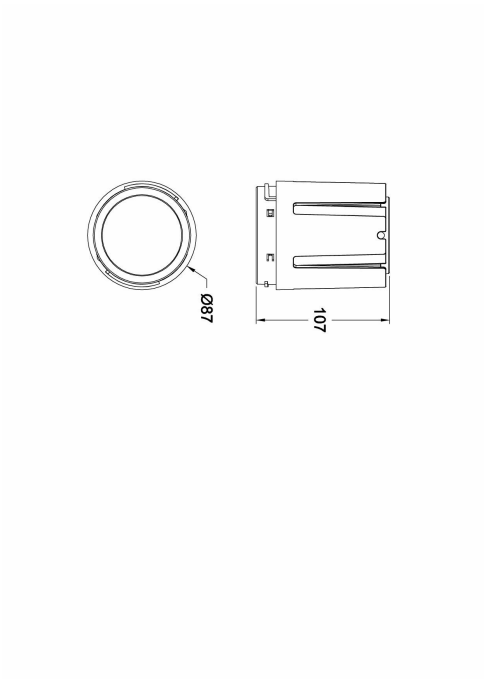

RS378B P33 930 PSU-E NB M87

Modular Type	D, mm	H, mm
RS378B P6/P11 M55	55	49
RS378B P15 M55	55	49
RS378B P24 M70	70	90
RS378B P33 M87	87	107
RS378B P42 M102	102	116

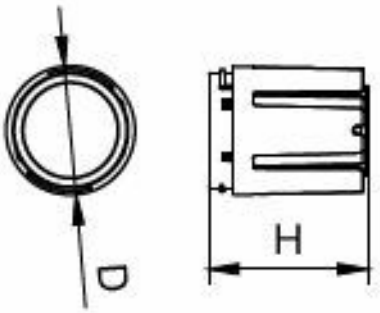

RS378B

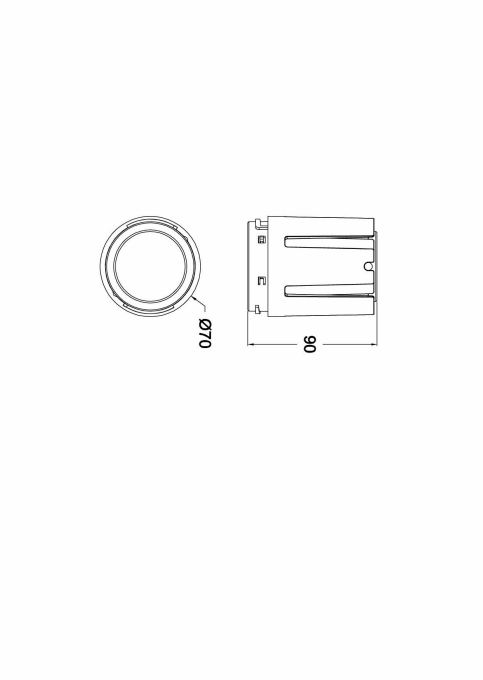

RS378B P24 940 PSU-E MB M70

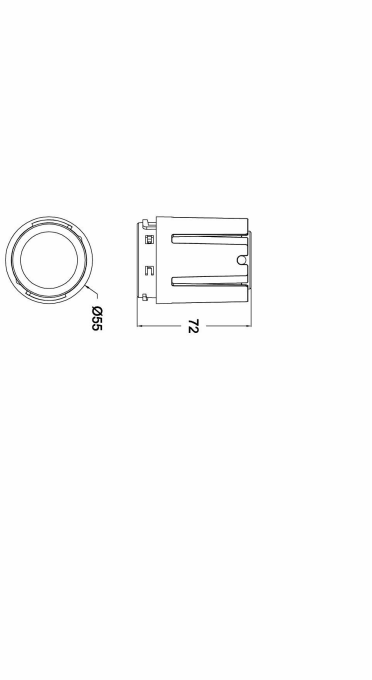

RS378B P15 930 PSU-E NB M55

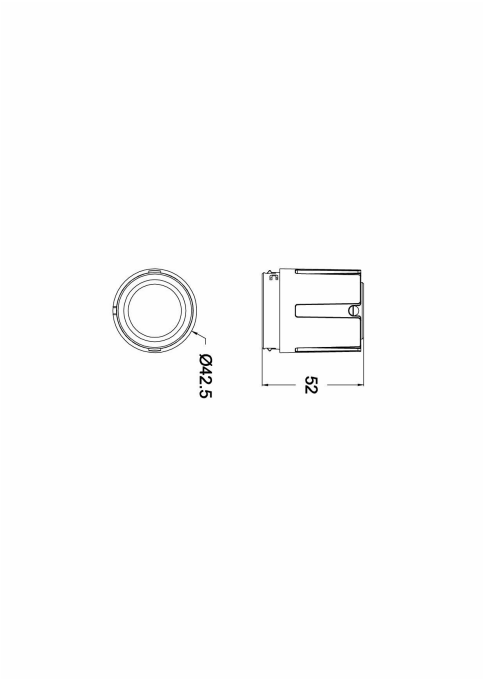

RS378B P6 930 PSD-E WB M43

General Information

Number of gear units	1 unit
Driver included	Yes

Light Technical

Color rendering index (CRI)	>90
Optic type	-

Operating and Electrical

Input Voltage	220-240 V
Line Frequency	50 or 60 Hz
Suitable for random switching	No
Protection class IEC	Safety class II

Mechanical and Housing

Housing Color	Grey
Ingress protection code	IP20 [Finger-protected]
Mech. impact protection code	IK04 [0.5 J standard plus]
Optical cover type	PMMA

Approval and Application

Glow-wire test	Temperature 600 °C, duration 30 s
Flammability mark	-
CE mark	Yes
ENEC mark	-
Ambient temperature range	-20 to +45 °C

Initial Performance (IEC Compliant)

Luminous flux tolerance	-10% / +10%
Initial chromaticity	SDCM<3

Over Time Performance (IEC Compliant)

Median useful life L80B50	50,000 hour(s)

Light Technical

Order Code	Full Product Name	Luminous Flux	Correlated Color Temperature (Nom)	Luminous Efficacy (rated) (Nom)	Beam angle of light source
911401535871	RS378B P11 927 PSD-E NB M55	580 lm	2700 K	97 lm/W	-
911401535971	RS378B P11 927 PSD-E MB M55	660 lm	2700 K	110 lm/W	-
911401536071	RS378B P11 927 PSD-E WB M55	660 lm	2700 K	110 lm/W	-
911401536271	RS378B P11 930 PSD-E MB M55	957 lm	3000 K	87 lm/W	-
911401536371	RS378B P11 930 PSD-E WB M55	957 lm	3000 K	87 lm/W	-
911401536471	RS378B P11 940 PSD-E NB M55	858 lm	4000 K	78 lm/W	-
911401536571	RS378B P11 940 PSD-E MB M55	1,012 lm	4000 K	92 lm/W	-

Order Code	Full Product Name	Luminous Flux	Correlated Color Temperature (Nom)	Luminous Efficacy (rated) (Nom)	Beam angle of light source
911401536671	RS378B P11 940 PSD-E WB M55	1,012 lm	4000 K	92 lm/W	-
911401720892	RS378B P6 927 PSU-E NB M55	3,864 lm	2700 K	92 lm/W	- degree(s)
911401720902	RS378B P6 930 PSU-E NB M55	1,305 lm	3000 K	87 lm/W	- degree(s)
911401720912	RS378B P6 940 PSU-E NB M55	1,200 lm	4000 K	80 lm/W	- degree(s)
911401720922	RS378B P6 927 PSU-E MB M55	2,540 lm	2700 K	77 lm/W	- degree(s)
911401720932	RS378B P6 930 PSU-E MB M55	4,074 lm	3000 K	97 lm/W	- degree(s)
911401720942	RS378B P6 940 PSU-E MB M55	900 lm	4000 K	82 lm/W	- degree(s)
911401720952	RS378B P6 927 PSU-E WB M55	3,864 lm	2700 K	92 lm/W	- degree(s)
911401720962	RS378B P6 930 PSU-E WB M55	1,500 lm	3000 K	100 lm/W	- degree(s)
911401720972	RS378B P6 940 PSU-E WB M55	1,400 lm	4000 K	93 lm/W	- degree(s)
911401720982	RS378B P11 927 PSU-E NB M55	836 lm	2700 K	76 lm/W	-
911401720992	RS378B P11 930 PSU-E NB M55	510 lm	3000 K	85 lm/W	-
911401721002	RS378B P11 940 PSU-E NB M55	570 lm	4000 K	95 lm/W	-
911401721012	RS378B P11 927 PSU-E MB M55	957 lm	2700 K	87 lm/W	-
911401721022	RS378B P11 930 PSU-E MB M55	510 lm	3000 K	85 lm/W	-
911401721032	RS378B P11 940 PSU-E MB M55	540 lm	4000 K	90 lm/W	-
911401721042	RS378B P11 927 PSU-E WB M55	957 lm	2700 K	87 lm/W	-
911401721052	RS378B P11 930 PSU-E WB M55	540 lm	3000 K	90 lm/W	-
911401721062	RS378B P11 940 PSU-E WB M55	570 lm	4000 K	95 lm/W	-
911401721112	RS378B P6 930 PSR-E MB M55	450 lm	3000 K	75 lm/W	-
911401721192	RS378B P11 927 PSR-E MB M55	510 lm	2700 K	85 lm/W	-
911401721622	RS378B P42 930 PSU-E NB M102	2,350 lm	3000 K	71 lm/W	-
911401721632	RS378B P42 940 PSU-E NB M102	2,400 lm	4000 K	73 lm/W	-
911401721642	RS378B P42 927 PSU-E MB M102	2,540 lm	2700 K	106 lm/W	-
911401721652	RS378B P42 930 PSU-E MB M102	2,350 lm	3000 K	71 lm/W	- degree(s)
911401721662	RS378B P42 940 PSU-E MB M102	2,400 lm	4000 K	73 lm/W	- degree(s)
911401721682	RS378B P42 930 PSU-E WB M102	2,350 lm	3000 K	71 lm/W	- degree(s)
911401721692	RS378B P42 940 PSU-E WB M102	2,400 lm	4000 K	73 lm/W	- degree(s)
911401534971	RS378B P6 927 PSD-E NB M55	570 lm	2700 K	95 lm/W	-
911401535071	RS378B P6 927 PSD-E MB M55	600 lm	2700 K	100 lm/W	-
911401535171	RS378B P6 927 PSD-E WB M55	600 lm	2700 K	100 lm/W	-
911401535371	RS378B P6 930 PSD-E MB M55	600 lm	3000 K	100 lm/W	-
911401535471	RS378B P6 930 PSD-E WB M55	600 lm	3000 K	100 lm/W	-
911401535571	RS378B P6 940 PSD-E NB M55	530 lm	4000 K	88 lm/W	-
911401537771	RS378B P24 927 PSD-E MB M70	1,500 lm	2700 K	100 lm/W	-
911401538071	RS378B P24 930 PSD-E MB M70	2,350 lm	3000 K	98 lm/W	-
911401538171	RS378B P24 930 PSD-E WB M70	2,350 lm	3000 K	98 lm/W	-
911401538271	RS378B P24 940 PSD-E NB M70	2,400 lm	4000 K	100 lm/W	-
911401538371	RS378B P24 940 PSD-E MB M70	2,400 lm	4000 K	100 lm/W	-
911401721442	RS378B P24 930 PSU-E NB M70	1,100 lm	3000 K	100 lm/W	-
911401721452	RS378B P24 940 PSU-E NB M70	1,170 lm	4000 K	78 lm/W	-
911401721472	RS378B P24 930 PSU-E MB M70	1,100 lm	3000 K	100 lm/W	-

Order Code	Full Product Name	Luminous Flux	Correlated Color Temperature (Nom)	Luminous Efficacy (rated) (Nom)	Beam angle of light source
911401721482	RS378B P24 940 PSU-E MB M70	1,350 lm	4000 K	90 lm/W	-
911401721502	RS378B P24 930 PSU-E WB M70	1,140 lm	3000 K	76 lm/W	-
911401721512	RS378B P24 940 PSU-E WB M70	1,410 lm	4000 K	94 lm/W	-
911401538571	RS378B P33 927 PSD-E NB M87	2,540 lm	2700 K	106 lm/W	-
911401538671	RS378B P33 927 PSD-E MB M87	2,540 lm	2700 K	106 lm/W	23 degree(s)
911401538871	RS378B P33 930 PSD-E NB M87	2,350 lm	3000 K	71 lm/W	-
911401539171	RS378B P33 940 PSD-E NB M87	2,400 lm	4000 K	73 lm/W	-
911401721522	RS378B P33 927 PSU-E NB M87	1,500 lm	2700 K	100 lm/W	-
911401721532	RS378B P33 930 PSU-E NB M87	2,350 lm	3000 K	98 lm/W	-
911401721542	RS378B P33 940 PSU-E NB M87	2,400 lm	4000 K	100 lm/W	-
911401721562	RS378B P33 930 PSU-E MB M87	2,350 lm	3000 K	98 lm/W	23 degree(s)
911401721572	RS378B P33 940 PSU-E MB M87	2,400 lm	4000 K	100 lm/W	23 degree(s)
911401721592	RS378B P33 930 PSU-E WB M87	2,350 lm	3000 K	98 lm/W	35 degree(s)
911401721602	RS378B P33 940 PSU-E WB M87	2,400 lm	4000 K	100 lm/W	35 degree(s)
911401539571	RS378B P42 927 PSD-E MB M102	2,540 lm	2700 K	77 lm/W	-
911401539871	RS378B P42 930 PSD-E MB M102	3,864 lm	3000 K	92 lm/W	-
911401539971	RS378B P42 930 PSD-E WB M102	3,864 lm	3000 K	92 lm/W	-
911401540271	RS378B P42 940 PSD-E WB M102	4,074 lm	4000 K	97 lm/W	-
911401545571	RS378B P11 930 PSU-E WW S	540 lm	3000 K	90 lm/W	-
911401545671	RS378B P11 940 PSU-E WW S	570 lm	4000 K	95 lm/W	-
911401546771	RS378B P15 930 PSD-E WW S	900 lm	3000 K	82 lm/W	-
911401536771	RS378B P15 927 PSD-E NB M55	957 lm	2700 K	87 lm/W	-
911401536871	RS378B P15 927 PSD-E MB M55	1,100 lm	2700 K	100 lm/W	-
911401537171	RS378B P15 930 PSD-E MB M55	1,350 lm	3000 K	90 lm/W	-
911401537271	RS378B P15 930 PSD-E WB M55	1,350 lm	3000 K	90 lm/W	-
911401537471	RS378B P15 940 PSD-E MB M55	1,410 lm	4000 K	94 lm/W	-
911401537571	RS378B P15 940 PSD-E WB M55	1,410 lm	4000 K	94 lm/W	-
911401540771	RS378B P15 930 PSR-E 1-10V MB M55	1,350 lm	3000 K	90 lm/W	-
911401540871	RS378B P15 930 PSR-E 1-10V WB M55	1,350 lm	3000 K	90 lm/W	-
911401532371	RS378B P6 927 PSU-E MB M43	2,540 lm	2700 K	77 lm/W	-
911401532471	RS378B P6 927 PSU-E WB M43	3,864 lm	2700 K	92 lm/W	-
911401532571	RS378B P6 930 PSU-E NB M43	4,074 lm	3000 K	97 lm/W	-
911401532671	RS378B P6 930 PSU-E MB M43	4,074 lm	3000 K	97 lm/W	-
911401532771	RS378B P6 930 PSU-E WB M43	1,500 lm	3000 K	100 lm/W	-
911401532871	RS378B P6 940 PSU-E NB M43	980 lm	4000 K	89 lm/W	-
911401532971	RS378B P6 940 PSU-E MB M43	800 lm	4000 K	73 lm/W	-
911401533071	RS378B P6 940 PSU-E WB M43	1,300 lm	4000 K	87 lm/W	-
911401533271	RS378B P6 927 PSR-E MB M43	4,386 lm	2700 K	104 lm/W	-
911401534471	RS378B P6 930 PSD-E MB M43	535 lm	3000 K	89 lm/W	-
911401534571	RS378B P6 930 PSD-E WB M43	535 lm	3000 K	89 lm/W	-
911401534771	RS378B P6 940 PSD-E MB M43	560 lm	4000 K	93 lm/W	-
911401721252	RS378B P15 927 PSU-E NB M55	510 lm	2700 K	85 lm/W	-

Order Code	Full Product Name	Luminous Flux	Correlated Color Temperature (Nom)	Luminous Efficacy (rated) (Nom)	Beam angle of light source
911401721262	RS378B P15 930 PSU-E NB M55	580 lm	3000 K	97 lm/W	-
911401721272	RS378B P15 940 PSU-E NB M55	836 lm	4000 K	76 lm/W	-
911401721282	RS378B P15 927 PSU-E MB M55	500 lm	2700 K	83 lm/W	-
911401721292	RS378B P15 930 PSU-E MB M55	545 lm	3000 K	91 lm/W	-
911401721302	RS378B P15 940 PSU-E MB M55	630 lm	4000 K	105 lm/W	-
911401721322	RS378B P15 930 PSU-E WB M55	580 lm	3000 K	97 lm/W	-
911401721332	RS378B P15 940 PSU-E WB M55	957 lm	4000 K	87 lm/W	-
911401721412	RS378B P15 930 PSR-E WB M55	1,350 lm	3000 K	90 lm/W	-
911401721422	RS378B P15 940 PSR-E WB M55	1,410 lm	4000 K	94 lm/W	-

Operating and Electrical

Order Code	Full Product Name	Power Consumption
911401535871	RS378B P11 927 PSD-E NB M55	11 W
911401535971	RS378B P11 927 PSD-E MB M55	11 W
911401536071	RS378B P11 927 PSD-E WB M55	11 W
911401536271	RS378B P11 930 PSD-E MB M55	11 W
911401536371	RS378B P11 930 PSD-E WB M55	11 W
911401536471	RS378B P11 940 PSD-E NB M55	11 W
911401536571	RS378B P11 940 PSD-E MB M55	11 W
911401536671	RS378B P11 940 PSD-E WB M55	11 W
911401720892	RS378B P6 927 PSU-E NB M55	6 W
911401720902	RS378B P6 930 PSU-E NB M55	6 W
911401720912	RS378B P6 940 PSU-E NB M55	6 W
911401720922	RS378B P6 927 PSU-E MB M55	6 W
911401720932	RS378B P6 930 PSU-E MB M55	6 W
911401720942	RS378B P6 940 PSU-E MB M55	6 W
911401720952	RS378B P6 927 PSU-E WB M55	6 W
911401720962	RS378B P6 930 PSU-E WB M55	6 W
911401720972	RS378B P6 940 PSU-E WB M55	6 W
911401720982	RS378B P11 927 PSU-E NB M55	11 W
911401720992	RS378B P11 930 PSU-E NB M55	11 W
911401721002	RS378B P11 940 PSU-E NB M55	11 W
911401721012	RS378B P11 927 PSU-E MB M55	11 W
911401721022	RS378B P11 930 PSU-E MB M55	11 W
911401721032	RS378B P11 940 PSU-E MB M55	11 W
911401721042	RS378B P11 927 PSU-E WB M55	11 W
911401721052	RS378B P11 930 PSU-E WB M55	11 W
911401721062	RS378B P11 940 PSU-E WB M55	11 W
911401721112	RS378B P6 930 PSR-E MB M55	6 W
911401721192	RS378B P11 927 PSR-E MB M55	11 W
911401721622	RS378B P42 930 PSU-E NB M102	42 W

Order Code	Full Product Name	Power Consumption
911401721632	RS378B P42 940 PSU-E NB M102	42 W
911401721642	RS378B P42 927 PSU-E MB M102	42 W
911401721652	RS378B P42 930 PSU-E MB M102	42 W
911401721662	RS378B P42 940 PSU-E MB M102	42 W
911401721682	RS378B P42 930 PSU-E WB M102	42 W
911401721692	RS378B P42 940 PSU-E WB M102	42 W
911401534971	RS378B P6 927 PSD-E NB M55	6 W
911401535071	RS378B P6 927 PSD-E MB M55	6 W
911401535171	RS378B P6 927 PSD-E WB M55	6 W
911401535371	RS378B P6 930 PSD-E MB M55	6 W
911401535471	RS378B P6 930 PSD-E WB M55	6 W
911401535571	RS378B P6 940 PSD-E NB M55	6 W
911401537771	RS378B P24 927 PSD-E MB M70	24 W
911401538071	RS378B P24 930 PSD-E MB M70	24 W
911401538171	RS378B P24 930 PSD-E WB M70	24 W
911401538271	RS378B P24 940 PSD-E NB M70	24 W
911401538371	RS378B P24 940 PSD-E MB M70	24 W
911401721442	RS378B P24 930 PSU-E NB M70	24 W
911401721452	RS378B P24 940 PSU-E NB M70	24 W
911401721472	RS378B P24 930 PSU-E MB M70	24 W
911401721482	RS378B P24 940 PSU-E MB M70	24 W
911401721502	RS378B P24 930 PSU-E WB M70	24 W
911401721512	RS378B P24 940 PSU-E WB M70	24 W
911401538571	RS378B P33 927 PSD-E NB M87	33 W
911401538671	RS378B P33 927 PSD-E MB M87	33 W
911401538871	RS378B P33 930 PSD-E NB M87	33 W
911401539171	RS378B P33 940 PSD-E NB M87	33 W
911401721522	RS378B P33 927 PSU-E NB M87	33 W
911401721532	RS378B P33 930 PSU-E NB M87	33 W
911401721542	RS378B P33 940 PSU-E NB M87	33 W
911401721562	RS378B P33 930 PSU-E MB M87	33 W
911401721572	RS378B P33 940 PSU-E MB M87	33 W
911401721592	RS378B P33 930 PSU-E WB M87	33 W
911401721602	RS378B P33 940 PSU-E WB M87	33 W
911401539571	RS378B P42 927 PSD-E MB M102	42 W
911401539871	RS378B P42 930 PSD-E MB M102	42 W
911401539971	RS378B P42 930 PSD-E WB M102	42 W
911401540271	RS378B P42 940 PSD-E WB M102	42 W
911401545571	RS378B P11 930 PSU-E WW S	11 W
911401545671	RS378B P11 940 PSU-E WW S	11 W
911401546771	RS378B P15 930 PSD-E WW S	15 W
911401536771	RS378B P15 927 PSD-E NB M55	15 W

Order Code	Full Product Name	Power Consumption
911401536871	RS378B P15 927 PSD-E MB M55	15 W
911401537171	RS378B P15 930 PSD-E MB M55	15 W
911401537271	RS378B P15 930 PSD-E WB M55	15 W
911401537471	RS378B P15 940 PSD-E MB M55	15 W
911401537571	RS378B P15 940 PSD-E WB M55	15 W
911401540771	RS378B P15 930 PSR-E 1-10V MB M55	15 W
911401540871	RS378B P15 930 PSR-E 1-10V WB M55	15 W
911401532371	RS378B P6 927 PSU-E MB M43	6 W
911401532471	RS378B P6 927 PSU-E WB M43	6 W
911401532571	RS378B P6 930 PSU-E NB M43	6 W
911401532671	RS378B P6 930 PSU-E MB M43	6 W
911401532771	RS378B P6 930 PSU-E WB M43	6 W
911401532871	RS378B P6 940 PSU-E NB M43	6 W
911401532971	RS378B P6 940 PSU-E MB M43	6 W
911401533071	RS378B P6 940 PSU-E WB M43	6 W
911401533271	RS378B P6 927 PSR-E MB M43	6 W
911401534471	RS378B P6 930 PSD-E MB M43	6 W
911401534571	RS378B P6 930 PSD-E WB M43	6 W
911401534771	RS378B P6 940 PSD-E MB M43	6 W
911401721252	RS378B P15 927 PSU-E NB M55	15 W
911401721262	RS378B P15 930 PSU-E NB M55	15 W
911401721272	RS378B P15 940 PSU-E NB M55	15 W
911401721282	RS378B P15 927 PSU-E MB M55	15 W
911401721292	RS378B P15 930 PSU-E MB M55	15 W
911401721302	RS378B P15 940 PSU-E MB M55	15 W
911401721322	RS378B P15 930 PSU-E WB M55	15 W
911401721332	RS378B P15 940 PSU-E WB M55	15 W
911401721412	RS378B P15 930 PSR-E WB M55	15 W
911401721422	RS378B P15 940 PSR-E WB M55	15 W

Controls and Dimming

Order Code	Full Product Name	Dimmable	Maximum dim level
911401535871	RS378B P11 927 PSD-E NB M55	DALI	-
911401535971	RS378B P11 927 PSD-E MB M55	DALI	-
911401536071	RS378B P11 927 PSD-E WB M55	DALI	-
911401536271	RS378B P11 930 PSD-E MB M55	DALI	-
911401536371	RS378B P11 930 PSD-E WB M55	DALI	-
911401536471	RS378B P11 940 PSD-E NB M55	DALI	-
911401536571	RS378B P11 940 PSD-E MB M55	DALI	-
911401536671	RS378B P11 940 PSD-E WB M55	DALI	-
911401720892	RS378B P6 927 PSU-E NB M55	No	Not applicable

Order Code	Full Product Name	Dimmable	Maximum dim level
911401720902	RS378B P6 930 PSU-E NB M55	No	Not applicable
911401720912	RS378B P6 940 PSU-E NB M55	No	Not applicable
911401720922	RS378B P6 927 PSU-E MB M55	No	Not applicable
911401720932	RS378B P6 930 PSU-E MB M55	No	Not applicable
911401720942	RS378B P6 940 PSU-E MB M55	No	Not applicable
911401720952	RS378B P6 927 PSU-E WB M55	No	Not applicable
911401720962	RS378B P6 930 PSU-E WB M55	No	Not applicable
911401720972	RS378B P6 940 PSU-E WB M55	No	Not applicable
911401720982	RS378B P11 927 PSU-E NB M55	No	Not applicable
911401720992	RS378B P11 930 PSU-E NB M55	No	Not applicable
911401721002	RS378B P11 940 PSU-E NB M55	No	Not applicable
911401721012	RS378B P11 927 PSU-E MB M55	No	Not applicable
911401721022	RS378B P11 930 PSU-E MB M55	No	Not applicable
911401721032	RS378B P11 940 PSU-E MB M55	No	Not applicable
911401721042	RS378B P11 927 PSU-E WB M55	No	Not applicable
911401721052	RS378B P11 930 PSU-E WB M55	No	Not applicable
911401721062	RS378B P11 940 PSU-E WB M55	No	Not applicable
911401721112	RS378B P6 930 PSR-E MB M55	TRIAC	10%
911401721192	RS378B P11 927 PSR-E MB M55	TRIAC	10%
911401721622	RS378B P42 930 PSU-E NB M102	No	Not applicable
911401721632	RS378B P42 940 PSU-E NB M102	No	Not applicable
911401721642	RS378B P42 927 PSU-E MB M102	No	Not applicable
911401721652	RS378B P42 930 PSU-E MB M102	No	Not applicable
911401721662	RS378B P42 940 PSU-E MB M102	No	Not applicable
911401721682	RS378B P42 930 PSU-E WB M102	No	Not applicable
911401721692	RS378B P42 940 PSU-E WB M102	No	Not applicable
911401534971	RS378B P6 927 PSD-E NB M55	DALI	-
911401535071	RS378B P6 927 PSD-E MB M55	DALI	-
911401535171	RS378B P6 927 PSD-E WB M55	DALI	-
911401535371	RS378B P6 930 PSD-E MB M55	DALI	-
911401535471	RS378B P6 930 PSD-E WB M55	DALI	-
911401535571	RS378B P6 940 PSD-E NB M55	DALI	-
911401537771	RS378B P24 927 PSD-E MB M70	DALI	-
911401538071	RS378B P24 930 PSD-E MB M70	DALI	-
911401538171	RS378B P24 930 PSD-E WB M70	DALI	-
911401538271	RS378B P24 940 PSD-E NB M70	DALI	-
911401538371	RS378B P24 940 PSD-E MB M70	DALI	-
911401721442	RS378B P24 930 PSU-E NB M70	No	Not applicable
911401721452	RS378B P24 940 PSU-E NB M70	No	Not applicable
911401721472	RS378B P24 930 PSU-E MB M70	No	Not applicable
911401721482	RS378B P24 940 PSU-E MB M70	No	Not applicable
911401721502	RS378B P24 930 PSU-E WB M70	No	Not applicable

Order Code	Full Product Name	Dimmable	Maximum dim level
911401721512	RS378B P24 940 PSU-E WB M70	No	Not applicable
911401538571	RS378B P33 927 PSD-E NB M87	DALI	-
911401538671	RS378B P33 927 PSD-E MB M87	DALI	-
911401538871	RS378B P33 930 PSD-E NB M87	DALI	-
911401539171	RS378B P33 940 PSD-E NB M87	DALI	-
911401721522	RS378B P33 927 PSU-E NB M87	No	Not applicable
911401721532	RS378B P33 930 PSU-E NB M87	No	Not applicable
911401721542	RS378B P33 940 PSU-E NB M87	No	Not applicable
911401721562	RS378B P33 930 PSU-E MB M87	No	Not applicable
911401721572	RS378B P33 940 PSU-E MB M87	No	Not applicable
911401721592	RS378B P33 930 PSU-E WB M87	No	Not applicable
911401721602	RS378B P33 940 PSU-E WB M87	No	Not applicable
911401539571	RS378B P42 927 PSD-E MB M102	DALI	-
911401539871	RS378B P42 930 PSD-E MB M102	DALI	-
911401539971	RS378B P42 930 PSD-E WB M102	DALI	-
911401540271	RS378B P42 940 PSD-E WB M102	DALI	-
911401545571	RS378B P11 930 PSU-E WW S	No	-
911401545671	RS378B P11 940 PSU-E WW S	No	-
911401546771	RS378B P15 930 PSD-E WW S	DALI	-
911401536771	RS378B P15 927 PSD-E NB M55	DALI	-
911401536871	RS378B P15 927 PSD-E MB M55	DALI	-
911401537171	RS378B P15 930 PSD-E MB M55	DALI	-
911401537271	RS378B P15 930 PSD-E WB M55	DALI	-
911401537471	RS378B P15 940 PSD-E MB M55	DALI	-
911401537571	RS378B P15 940 PSD-E WB M55	DALI	-
911401540771	RS378B P15 930 PSR-E 1-10V MB M55	1-10V	-
911401540871	RS378B P15 930 PSR-E 1-10V WB M55	1-10V	-
911401532371	RS378B P6 927 PSU-E MB M43	No	-
911401532471	RS378B P6 927 PSU-E WB M43	No	-
911401532571	RS378B P6 930 PSU-E NB M43	No	-
911401532671	RS378B P6 930 PSU-E MB M43	No	-
911401532771	RS378B P6 930 PSU-E WB M43	No	-
911401532871	RS378B P6 940 PSU-E NB M43	No	-
911401532971	RS378B P6 940 PSU-E MB M43	No	-
911401533071	RS378B P6 940 PSU-E WB M43	No	-
911401533271	RS378B P6 927 PSR-E MB M43	TRIAC	-
911401534471	RS378B P6 930 PSD-E MB M43	DALI	-
911401534571	RS378B P6 930 PSD-E WB M43	DALI	-
911401534771	RS378B P6 940 PSD-E MB M43	DALI	-
911401721252	RS378B P15 927 PSU-E NB M55	No	Not applicable
911401721262	RS378B P15 930 PSU-E NB M55	No	Not applicable
911401721272	RS378B P15 940 PSU-E NB M55	No	Not applicable

Order Code	Full Product Name	Dimmable	Maximum dim level
911401721282	RS378B P15 927 PSU-E MB M55	No	Not applicable
911401721292	RS378B P15 930 PSU-E MB M55	No	Not applicable
911401721302	RS378B P15 940 PSU-E MB M55	No	Not applicable
911401721322	RS378B P15 930 PSU-E WB M55	No	Not applicable
911401721332	RS378B P15 940 PSU-E WB M55	No	Not applicable
911401721412	RS378B P15 930 PSR-E WB M55	TRIAC	10%
911401721422	RS378B P15 940 PSR-E WB M55	TRIAC	10%

© 2026 Signify Holding. All rights reserved. The information provided herein is subject to change, without notice. Signify does not give any representation or warranty as to the accuracy or completeness of the information included herein and shall not be liable for any action in reliance thereon. The information presented in this document is not intended as any commercial offer and does not form part of any quotation or contract, unless otherwise agreed by Signify. Philips and the Philips Shield Emblem are registered trademarks of Koninklijke Philips N.V.