PHILIPS

# Smartbright WT200/201 waterproof

6999455



## Built for performance - Waterproof Lighting solution for Dusty and Humid application

Smartbright Waterproof luminaire is a special application luminaire designed to provide undisrupted lighting for dusty and humid indoor application. It is a perfect solution for lighting up indoor spaces like multilevel car park, open canopies in bus stations and general industrial applications. The luminaire has all-weather polycarbonate housing and highly efficient electronics with LED system to offer long useful life even in adverse application and environmental conditions. With unique design, variety of options in lumen packs and color temperature makes it suitable for diverse applications.

### Benefits

- Rugged & Suitable for dusty and humid environment
- Ensures long useful life and reliable performance even in extreme conditions
- Greater energy savings help end users to reduce ROI
- Application & Design freedom provides flexibility to user
- Creates a diffused natural light, ensuring visual comfort
- Easy to install

### Applications

- Multi-level parking lots
- Industrial sheds
- Public areas
- Damp Areas

### Features

- High ingress protection – IP65
- High Impact resistance- IK08
- Compact integral design with superior efficacy > 120lm/w
- Multiple lumen packs & CCT
- Light color: 4000K, 6500K, SDCM<5
- High Surge Protection – 4KV
- Ripple < 5% & THD < 10%
- EMI-EMC Compliance
- Over Voltage Cut-off@ 325V

- Co-extruded polycarbonate housing
- Easy to install-External click fixing mounting arrangement
- Meant for Indoor Application Only. Should not be used in outdoor exposed to Sun and Rain.

## Versions



Smartbright Waterproof Batten-WT201C

## Dimensional drawing

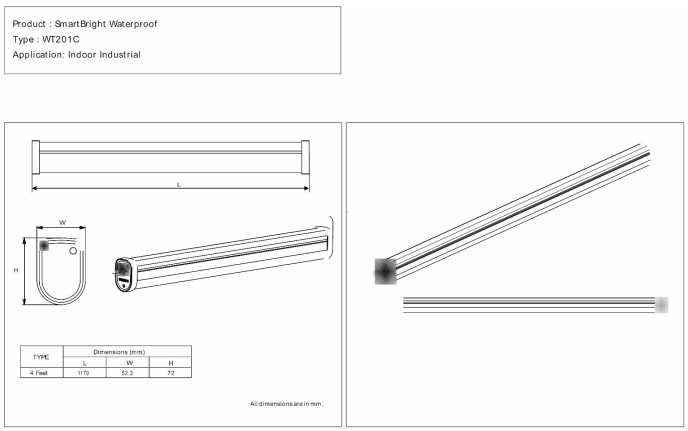


WT201C LED

## Product details



Smartbright_Waterproof Batten-WT201C

### General Information

| | |
|---|---|
| Driver included | Yes |

### Light Technical

| | |
|---|---|
| Color rendering index (CRI) | >80 |
| Beam angle of light source | 120 degree(s) |
| Optic type | Beam angle 120° |

### Operating and Electrical

| | |
|---|---|
| Input Voltage | 140-270 V |
| Protection class IEC | Safety class I |

### Controls and Dimming

| | |
|---|---|
| Dimmable | No |

### Mechanical and Housing

| | |
|---|---|
| Housing Color | Gray |
| Ingress protection code | IP65 [Dust penetration-protected, jet-proof] |
| Mech. impact protection code | IK08 [5 J vandal-protected] |
| Optical cover type | Polycarbonate |

### Approval and Application

| | |
|---|---|
| Flammability mark | For mounting on normally flammable surfaces |
| Ambient temperature range | 0 to +45 °C |

### Initial Performance (IEC Compliant)

| | |
|---|---|
| Initial chromaticity | <5 |

## Light Technical

| Order Code | Full Product Name | Luminous Flux | Correlated Color Temperature (Nom) | Luminous Efficacy (rated) (Nom) |
|---|---|---|---|---|
| 919515812984 | WT201C LED44S-6500 PSU L120 S2 | 4,400 lm | 6500 K | 120 lm/W |
| 919515812985 | WT201C LED44S-4000 PSU L120 S2 | 4,400 lm | 4000 K | 120 lm/W |
| 919515813273 | WT201C LED24S-6500 PSU L120 S2 | 2,400 lm | 6500 K | 130 lm/W |
| 919515813274 | WT201C LED24S-4000 PSU L120 S2 | 2,400 lm | 4000 K | 130 lm/W |

## Operating and Electrical

| Order Code | Full Product Name | Power Consumption |
|---|---|---|
| 919515812984 | WT201C LED44S-6500 PSU L120 S2 | 36 W |
| 919515812985 | WT201C LED44S-4000 PSU L120 S2 | 36 W |
| 919515813273 | WT201C LED24S-6500 PSU L120 S2 | 18 W |
| 919515813274 | WT201C LED24S-4000 PSU L120 S2 | 18 W |

© 2026 Signify Holding. All rights reserved. The information provided herein is subject to change, without notice. Signify does not give any representation or warranty as to the accuracy or completeness of the information included herein and shall not be liable for any action in reliance thereon. The information presented in this document is not intended as any commercial offer and does not form part of any quotation or contract, unless otherwise agreed by Signify. Philips and the Philips Shield Emblem are registered trademarks of Koninklijke Philips N.V.