PHILIPS

WT065C G3 LED48S/840 PSU L1200 ELR BN

911401870485



Ledinaire Waterproof WT065C, (in brown Eco Packaging), 44 W, L1200 mm, 4800 lm, 4000 K, Symmetrical, Opal, IP65, IK08, TW1-ready, EL-ready

(in brown Eco Packaging), L1200 mm, Polycarbonate, Grey, Power supply unit (On/Off), 4800 lm, 44 W, 109 lm/W, 4000 K, (0.38,0.38)SDCM<=5, Symmetrical, Opal, Polycarbonate, IP65 | Dust penetration-protected, jet-proof, IK08 | 5 J vandal-protected, Safety class I, Push-in connector 4-pole, Simple Connection and removable cover available for feed-through wiring 1-phase (internal wiring is not included), Self-contained emergency lighting is possible when used with a compatible battery kit accessory

General Information

Number of gear units	1 unit
Driver included	Yes
Sustainability rating	Unclassified
Service tag	No
Value ladder	Value
Warranty period	5 years

Light Technical

Luminous Flux	4,800 lm
Saturated Red (R9)	<50
Correlated Color Temperature (Nom)	4000 K
Luminous Efficacy (rated) (Nom)	109 lm/W
Color rendering index (CRI)	>80
Light source color	840 neutral white
Optic type	Symmetrical
Luminaire light beam spread	110°
Unified glare rating CEN	31

Operating and Electrical

Input Voltage	220 to 240 V
Line Frequency	50 or 60 Hz
Inrush current	18.6 A
Inrush time	0.153 ms
Power Consumption	44 W
Power Factor (Fraction)	0.9
Connection	Push-in connector 4-pole
Cable	-
Number of products on MCB of 16 A type B	36
Suitable for random switching	Yes
Protection class IEC	Safety class I
Feed-through wiring	Simple Connection and removable cover available for feed-through wiring 1-phase (internal wiring is not included)
Total harmonic distortion	20 %

Controls and Dimming

Dimmable	No
Driver/power unit/transformer	Power supply unit (On/Off)
Control interface	-
Constant light output	No

Mechanical and Housing

Housing Material	Polycarbonate
Reflector material	Steel
Optic material	Polycarbonate
Optical cover material	Polycarbonate
Fixation material	Stainless steel
Housing Color	Grey
Optical cover finish	Opal
Overall length	1,207 mm
Overall width	71 mm
Overall height	74 mm
Dimensions (Height x Width x Depth)	74 x 71 x 1207 mm
Ingress protection code	IP65 [Dust penetration-protected, jet-proof]
Mech. impact protection code	IK08 [5 J vandal-protected]
Net Weight (Piece)	1.250 kg

Emergency Operation

Central Emergency	No
Emergency lighting	Self-contained emergency lighting is possible when used with a compatible battery kit accessory

Approval and Application

Glow-wire test	Temperature 850 °C, duration 30 s
Flammability mark	For mounting on easily flammable surfaces
CE mark	Yes
ENEC mark	-
Photobiological risk	Photobiological risk group 0 @200mm to EN62778
Photobiological risk specification	0.2 m
EU RoHS compliant	Yes
Performance ambient temperature Tq	25 °C
Flickering value (PstLM) - Flickering value as per EN 61000-3-3	1
Stroboscopic effect visibility measure (SVM)	0.4
Ambient temperature range	-20 to +40 °C

Initial Performance (IEC Compliant)

Luminous flux tolerance	+/-10%
Initial chromaticity	(0.38,0.38)SDCM<=5
Power consumption tolerance	+/-10%

Over Time Performance (IEC Compliant)

Control gear failure rate at median useful life 50000 h	7.5 %
Lumen maintenance (EN-IEC 62722-2-1) at median useful life* 50000 h	L75
Lumen maintenance (EN-IEC 62722-2-1) at median useful life* 75000 h	L70

Sustainability Data

Repair class	Repair Class D, this product is not designed to be repaired.
Non-virgin material ratio of the packaging	Cardboard > 80% recycled
Packaging Recyclable content ratio	Cardboard recycling rate > 80%
Packaging Material	Cardboard

Product Data

Order product name	WT065C G3 LED48S/840 PSU L1200 ELR BN
Full product name	WT065C G3 LED48S/840 PSU L1200 ELR BN
Full product code	872016951510999
Order code	911401870485
Material Nr. (12NC)	911401870485
Numerator - Quantity Per Pack	1
EAN/UPC - Product/Case	8720169515109
Numerator - Packs per outer box	9
EAN/UPC - Case	8720169515154

Dimensional drawing

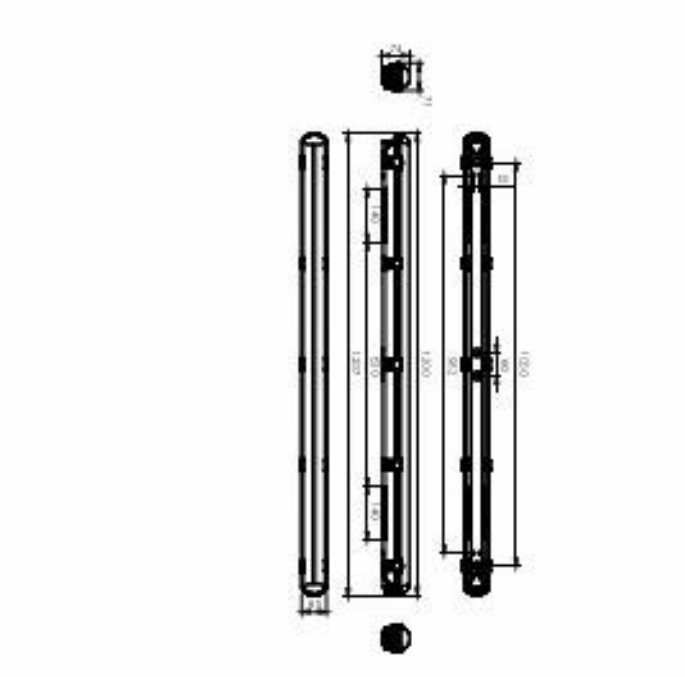

Compatible Accesories

Accessory Image	Accessory Code	Accessory Name	Website
	912401483459	EM300V ELB3 kit HV 6.4V 2000mAh LFP	Product Website
	912401483460	EM300V ELP3 kit HV 6.4V 2000mAh LFP	Product Website
	912401483603	EM300V ELB_ELP3 kit HV 6.4V 2000mAh LFP	Product Website

Related Documents

Documents and certificates	Document Name	Download
Installation Instructions	WT065C G3 ELR BN 20230725V2.pdf	Download

Photometry and lighting design	Document Name	Download
IES File	WT065C-G3-LED48S-840-PSU-L1200.ies	Download

© 2026 Signify Holding. All rights reserved. The information provided herein is subject to change, without notice. Signify does not give any representation or warranty as to the accuracy or completeness of the information included herein and shall not be liable for any action in reliance thereon. The information presented in this document is not intended as any commercial offer and does not form part of any quotation or contract, unless otherwise agreed by Signify. Philips and the Philips Shield Emblem are registered trademarks of Koninklijke Philips N.V.