PHILIPS

## CPL

XDCPLP



# CPL – unique short arc UV and IR sources

The Compact Power Lamps (CPLs) product range offers unique short arc UV and IR light sources. CPLs are derived from the highly successful Ultra High Pressure (UHP) lamp platform, which was originally developed for professional projection systems. CPLs are well suited to be mounted in conjunction with digital mirror devices (DMD's) or in fiber optic systems.

### Benefits

- Stable spectrum and optical characteristics
- Cut-off in visible and IR light on the UV version

### Applications

- Print screen curing
- PCB exposure
- Very localized, pin-point IR heating/curing
- UV projections

### Features

- Short arc UV version available
- Short arc IR version available

- A lamp breaking is extremely unlikely to have any impact on your health. If a lamp breaks, ventilate the room for 30 minutes and remove the parts, preferably with gloves. Put them in a sealed plastic bag and take it to your local waste facilities for recycling. Do not use a vacuum cleaner.

## Versions



XPPR_XDCPL_0001-Product photo

## Dimensional drawing

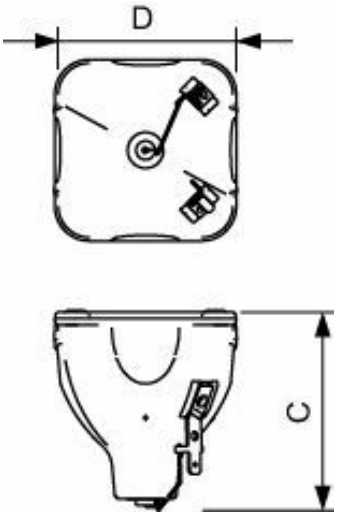


| Product |
| --- |
| CPL 330 Ultra-V UNP |

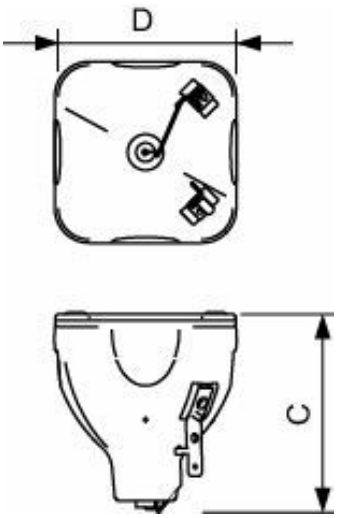


| Product | D (max) | O | C (max) |
| --- | --- | --- | --- |
| CPL 330 Ultra-V UNP | 58.5 mm | 1.3 mm | 66.4 mm |

### General Information

| | |
| --- | --- |
| Operating Position | P20 [Parallel +/-20D or Horizontal(HOR)] |

## Light Technical

| | |
|---|---|
| Correlated Color Temperature (Nom) | - |

## Operating and Electrical

| | |
|---|---|
| Power Consumption | 330 W |
| Lamp Current (Nom) | 3.5 A |

## Controls and Dimming

| | |
|---|---|
| Dimmable | Yes |

© 2026 Signify Holding. All rights reserved. The information provided herein is subject to change, without notice. Signify does not give any representation or warranty as to the accuracy or completeness of the information included herein and shall not be liable for any action in reliance thereon. The information presented in this document is not intended as any commercial offer and does not form part of any quotation or contract, unless otherwise agreed by Signify. Philips and the Philips Shield Emblem are registered trademarks of Koninklijke Philips N.V.