PHILIPS

Ledinaire SlimDownlight

DN065B



Proven quality. Effortless installation. Every time. Your dependable and affordable choice for every job

The LEDINAIRE range contains a selection of popular off-the-shelf LED luminaires that come with the high Philips quality levels at a competitive price. Reliable, energy-efficient and affordable – just what you need

Benefits

- Philips quality and reliability
- Energy saving
- Comfortable diffuse surface of light

Features

- Multiple sizes and light levels available
- Multiple light colors available
- Utra slim design

Applications

- Corridors
- Rest rooms
- Waiting rooms

Versions



DN065B G4 LED20 19W D200 RD



LEDINAIRE SlimDownlight-DN065B LED10S



DN065B G4 830 840 865 PSU E RD



DN065B G4 LED12 12W D150 RD



Downlight MZD DN027C 220V RD



DN065B G3 LDNR LED10 L150 SQ



DN065B G4 830 840 865 PSU E PG

Dimensional drawing

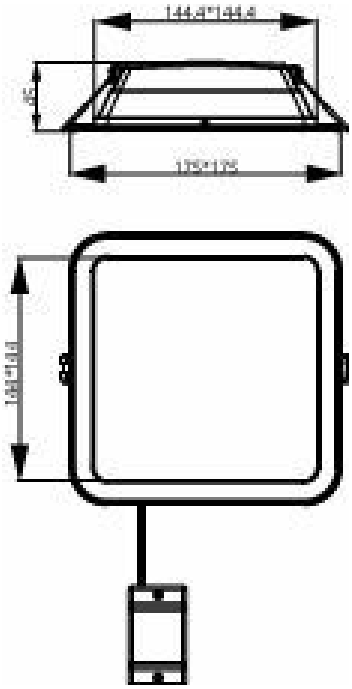

DN065B G4 LED12/830 12W 220-240V L150 SQ

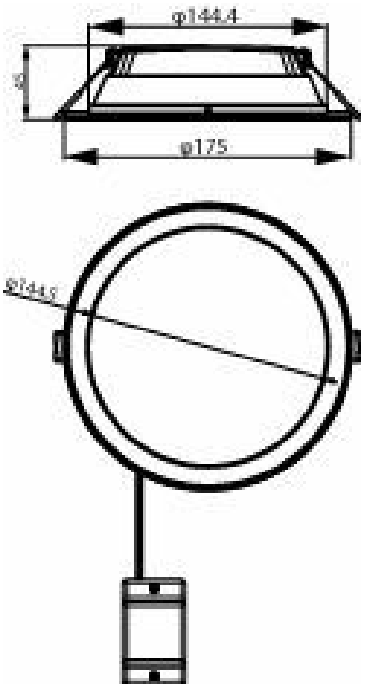

DN065B G4 LED12/830 12W 220-240V D150 RD

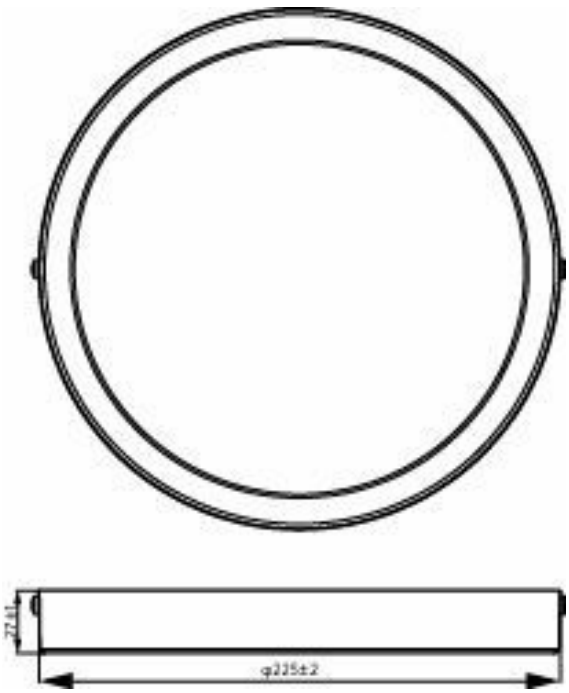

DN065C G4 LED20/830 19W 220-240V 8-D225

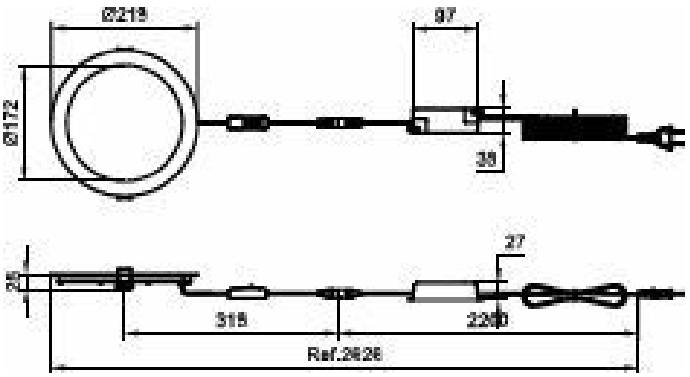

DN065B G4 20S/830_840_865 PSU-E D200 PG

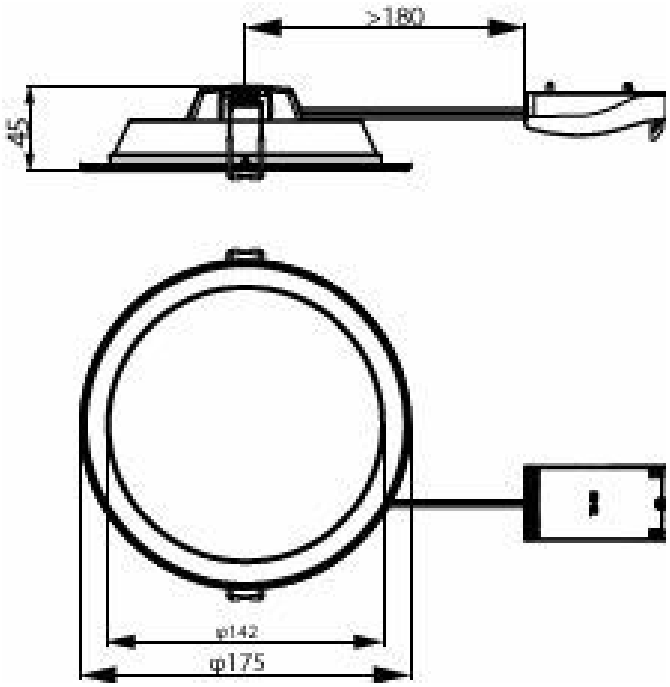

DN065B G4 LED12/830_840_865 12W D150 RD

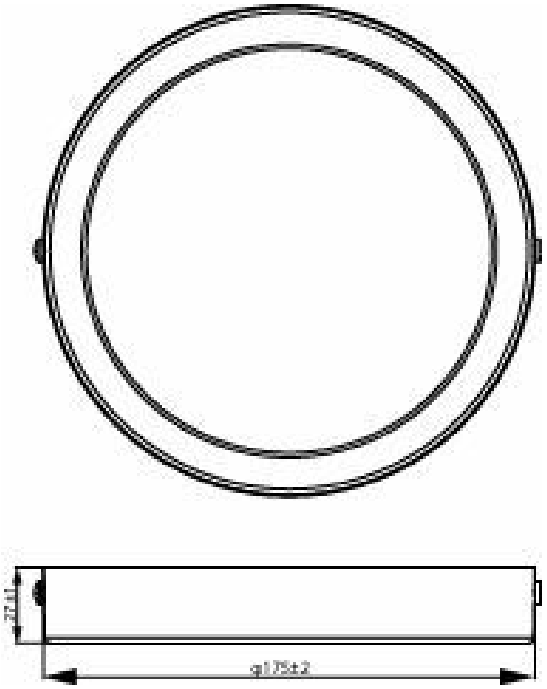

DN065C G4 LED12/840 12W 220-240V 6-D175

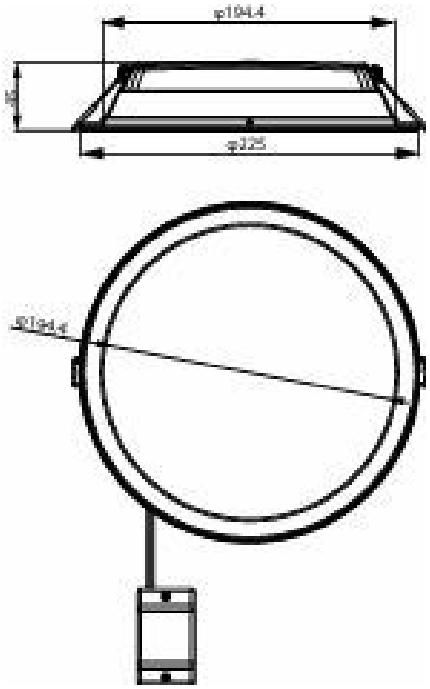

DN065B G4 LED20/840 19W 220-240V D200 RD

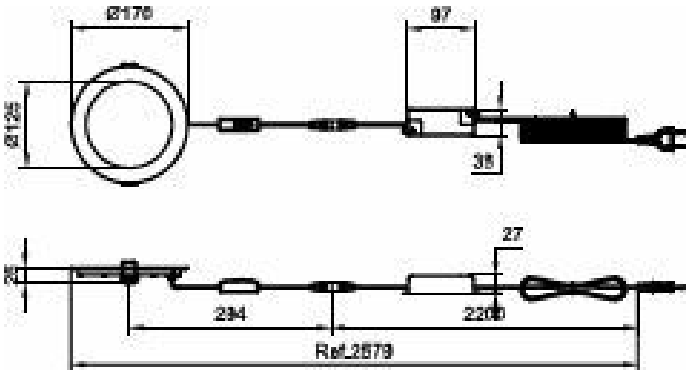

DN065B G4 12S/830_840_865 PSU-E D150 PG

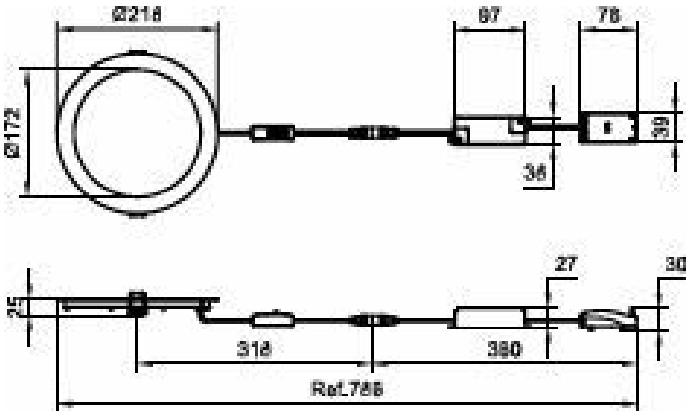

DN065B G4 20S/830_840_865 PSU-E D200 RD

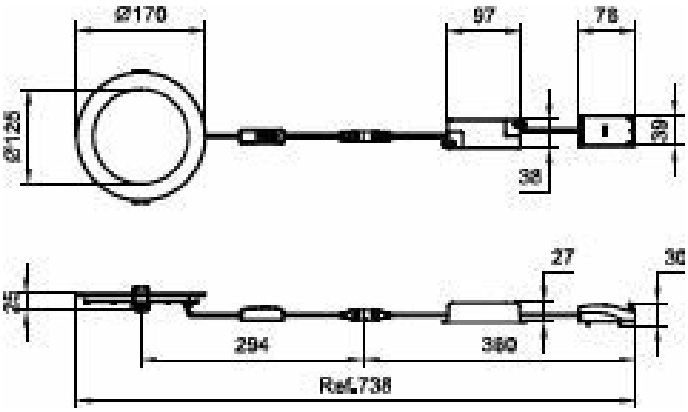

DN065B G4 12S/830_840_865 PSU-E D150 RD

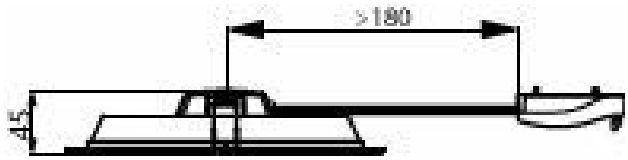

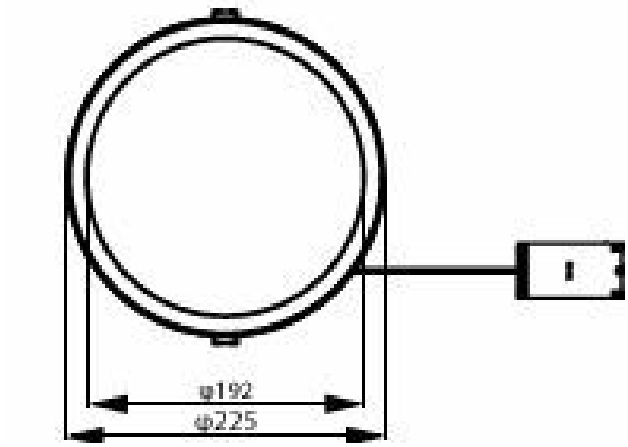

DN065B G4 LED20/830_840_865 19W D200 RD

Product details



Philips Ledinaire slim downlight surface mounted DT03



Philips Ledinaire slim downlight surface mounted Back DT01



Philips Ledinaire slim downlight surface mounted DT04



Philips Ledinaire slim downlight surface mounted DT01



additional photo



Philips Ledinaire slim downlight recessed DT03



Philips Ledinaire slim downlight recessed DT01



Philips Ledinaire slim downlight recessed Back DT01



additional photo



Philips Ledinaire slim downlight surface mounted DT02



Philips Ledinaire slim downlight recessed DT02



Philips Ledinaire slim downlight recessed DT04



additional photo

General Information

Light source replaceable	No
Number of gear units	1 unit
Driver included	Yes

Light Technical

Color rendering index (CRI)	80
All-in Type	All-in, Multi Color Temperature

Operating and Electrical

Input Voltage	220 to 240 V
Line Frequency	50 or 60 Hz
Suitable for random switching	Yes
Protection class IEC	Safety class II

Controls and Dimming

Dimmable	No

Mechanical and Housing

Housing Color	White
Mech. impact protection code	IK03 [0.35 J reinforced]

Emergency Operation

Central Emergency	No
Emergency lighting	Self-contained emergency lighting is possible when used with a compatible battery kit accessory

Approval and Application

Glow-wire test	Temperature 650 °C, duration 30 s
Flammability mark	For mounting on normally flammable surfaces
CE mark	Yes
Ambient temperature range	-20 to +40 °C

Initial Performance (IEC Compliant)

Luminous flux tolerance	+/-10%

Light Technical

Order Code	Full Product Name	Luminous Flux	Correlated Color Temperature (Nom)	Luminous Efficacy (rated) (Nom)	Optic type
929003251432	DN065B G4 LED20/830_840_865 19W D200 RD	2,000 lm	3000 K 4000 K 6500 K	105 lm/W	Beam angle 110°
929003250532	DN065B G4 LED12/830 12W 220-240V D150 RD	1,200 lm	3000 K	100 lm/W	Beam angle 110°
929003250632	DN065B G4 LED12/840 12W 220-240V D150 RD	1,200 lm	4000 K	100 lm/W	Beam angle 110°
929003250832	DN065B G4 LED20/830 19W 220-240V D200 RD	2,000 lm	3000 K	105 lm/W	Beam angle 110°
929003250932	DN065B G4 LED20/840 19W 220-240V D200 RD	2,000 lm	4000 K	105 lm/W	Beam angle 110°
929004083532	DN065B G4 12S/830_840_865 PSU-E D150 RD	1,200 lm	3000 K	100 lm/W	Beam angle 100°
929004083632	DN065B G4 20S/830_840_865 PSU-E D200 RD	2,000 lm	3000 K	105 lm/W	Beam angle 100°
929003251332	DN065B G4 LED12/830_840_865 12W D150 RD	1,200 lm	3000 K 4000 K 6500 K	100 lm/W	Beam angle 110°
929003251532	DN065C G4 LED12/830 12W 220-240V 6-D175	1,200 lm	3000 K	100 lm/W	Beam angle 110°
929003251632	DN065C G4 LED12/840 12W 220-240V 6-D175	1,200 lm	4000 K	108 lm/W	Beam angle 110°
929003251732	DN065C G4 LED20/830 19W 220-240V 8-D225	2,000 lm	3000 K	105 lm/W	Beam angle 110°
929003251832	DN065C G4 LED20/840 19W 220-240V 8-D225	2,000 lm	4000 K	105 lm/W	Beam angle 110°
929003251132	DN065B G4 LED12/830 12W 220-240V L150 SQ	1,200 lm	3000 K	100 lm/W	Beam angle 110°
929003251232	DN065B G4 LED12/840 12W 220-240V L150 SQ	1,200 lm	4000 K	100 lm/W	Beam angle 110°
929004128832	DN065B G4 12S/830_840_865 PSU-E D150 PG	1,200 lm	3000 K	100 lm/W	Beam angle 100°
929004128932	DN065B G4 20S/830_840_865 PSU-E D200 PG	2,000 lm	3000 K	105 lm/W	Beam angle 100°

Operating and Electrical

Order Code	Full Product Name	Power Consumption
929003251432	DN065B G4 LED20/830_840_865 19W D200 RD	19 W
929003250532	DN065B G4 LED12/830 12W 220-240V D150 RD	12 W
929003250632	DN065B G4 LED12/840 12W 220-240V D150 RD	12 W
929003250832	DN065B G4 LED20/830 19W 220-240V D200 RD	19 W
929003250932	DN065B G4 LED20/840 19W 220-240V D200 RD	19 W
929004083532	DN065B G4 12S/830_840_865 PSU-E D150 RD	12 W
929004083632	DN065B G4 20S/830_840_865 PSU-E D200 RD	19 W
929003251332	DN065B G4 LED12/830_840_865 12W D150 RD	12 W
929003251532	DN065C G4 LED12/830 12W 220-240V 6-D175	12 W
929003251632	DN065C G4 LED12/840 12W 220-240V 6-D175	12 W
929003251732	DN065C G4 LED20/830 19W 220-240V 8-D225	19 W
929003251832	DN065C G4 LED20/840 19W 220-240V 8-D225	19 W
929003251132	DN065B G4 LED12/830 12W 220-240V L150 SQ	12 W
929003251232	DN065B G4 LED12/840 12W 220-240V L150 SQ	12 W
929004128832	DN065B G4 12S/830_840_865 PSU-E D150 PG	12 W
929004128932	DN065B G4 20S/830_840_865 PSU-E D200 PG	19 W

Mechanical and Housing

Order Code	Full Product Name	Ingress protection code
929003251432	DN065B G4 LED20/830_840_865 19W D200 RD	IP20/44
929003250532	DN065B G4 LED12/830 12W 220-240V D150 RD	IP20/44
929003250632	DN065B G4 LED12/840 12W 220-240V D150 RD	IP20/40
929003250832	DN065B G4 LED20/830 19W 220-240V D200 RD	IP20/40
929003250932	DN065B G4 LED20/840 19W 220-240V D200 RD	IP20/40
929004083532	DN065B G4 12S/830_840_865 PSU-E D150 RD	IP20/44
929004083632	DN065B G4 20S/830_840_865 PSU-E D200 RD	IP20/44
929003251332	DN065B G4 LED12/830_840_865 12W D150 RD	IP20/44
929003251532	DN065C G4 LED12/830 12W 220-240V 6-D175	IP20/40
929003251632	DN065C G4 LED12/840 12W 220-240V 6-D175	IP20/40
929003251732	DN065C G4 LED20/830 19W 220-240V 8-D225	IP20/40
929003251832	DN065C G4 LED20/840 19W 220-240V 8-D225	IP20/40
929003251132	DN065B G4 LED12/830 12W 220-240V L150 SQ	IP20/40
929003251232	DN065B G4 LED12/840 12W 220-240V L150 SQ	IP20/40
929004128832	DN065B G4 12S/830_840_865 PSU-E D150 PG	IP20/44
929004128932	DN065B G4 20S/830_840_865 PSU-E D200 PG	IP20/44

Approval and Application

Order Code	Full Product Name	Flickering value (PstLM) - Flickering value as per EN 61000-3-3	Stroboscopic effect visibility measure (SVM)
929003251432	DN065B G4 LED20/830_840_865 19W D200 RD	0.7	0.4
929003250532	DN065B G4 LED12/830 12W 220-240V D150 RD	0.7	0.4
929003250632	DN065B G4 LED12/840 12W 220-240V D150 RD	0.7	0.4
929003250832	DN065B G4 LED20/830 19W 220-240V D200 RD	0.7	0.4
929003250932	DN065B G4 LED20/840 19W 220-240V D200 RD	0.7	0.4
929004083532	DN065B G4 12S/830_840_865 PSU-E D150 RD	0.9	0.3
929004083632	DN065B G4 20S/830_840_865 PSU-E D200 RD	0.9	0.3
929003251332	DN065B G4 LED12/830_840_865 12W D150 RD	0.7	0.4
929003251532	DN065C G4 LED12/830 12W 220-240V 6-D175	0.7	0.4
929003251632	DN065C G4 LED12/840 12W 220-240V 6-D175	0.7	0.4
929003251732	DN065C G4 LED20/830 19W 220-240V 8-D225	0.7	0.4
929003251832	DN065C G4 LED20/840 19W 220-240V 8-D225	0.7	0.4
929003251132	DN065B G4 LED12/830 12W 220-240V L150 SQ	0.7	0.4
929003251232	DN065B G4 LED12/840 12W 220-240V L150 SQ	0.7	0.4
929004128832	DN065B G4 12S/830_840_865 PSU-E D150 PG	0.9	0.3
929004128932	DN065B G4 20S/830_840_865 PSU-E D200 PG	0.9	0.3

Initial Performance (IEC Compliant)

Order Code	Full Product Name	Initial chromaticity
929003251432	DN065B G4 LED20/830_840_865 19W D200 RD	(0.44, 0.403) SDCM≤5

Order Code	Full Product Name	Initial chromaticity
929003250532	DN065B G4 LED12/830 12W 220-240V D150 RD	(0.44, 0.403) SDCM≤5
929003250632	DN065B G4 LED12/840 12W 220-240V D150 RD	(0.38, 0.38) SDCM≤5
929003250832	DN065B G4 LED20/830 19W 220-240V D200 RD	(0.44, 0.403) SDCM≤5
929003250932	DN065B G4 LED20/840 19W 220-240V D200 RD	(0.38, 0.38) SDCM≤5
929004083532	DN065B G4 12S/830_840_865 PSU-E D150 RD	(ANSI3000K, 0.4339;, 0.4033 ; 4000K0.3761;0.3658 ; ANSI6500K0.3123;0.3283) 5SDCM
929004083632	DN065B G4 20S/830_840_865 PSU-E D200 RD	(ANSI3000K, 0.4339;, 0.4033 ; 4000K0.3761;0.3658 ; ANSI6500K0.3123;0.3283) 5SDCM
929003251332	DN065B G4 LED12/830_840_865 12W D150 RD	(0.44, 0.403) SDCM≤5
929003251532	DN065C G4 LED12/830 12W 220-240V 6-D175	(0.44, 0.403) SDCM≤5
929003251632	DN065C G4 LED12/840 12W 220-240V 6-D175	(0.38, 0.38) SDCM≤5
929003251732	DN065C G4 LED20/830 19W 220-240V 8-D225	(0.44, 0.403) SDCM≤5
929003251832	DN065C G4 LED20/840 19W 220-240V 8-D225	(0.38, 0.38) SDCM≤5
929003251132	DN065B G4 LED12/830 12W 220-240V L150 SQ	(0.44, 0.403) SDCM≤5
929003251232	DN065B G4 LED12/840 12W 220-240V L150 SQ	(0.38, 0.38) SDCM≤5
929004128832	DN065B G4 12S/830_840_865 PSU-E D150 PG	(ANSI3000K, 0.4339;, 0.4033 ; 4000K0.3761;0.3658 ; ANSI6500K0.3123;0.3283) 5SDCM
929004128932	DN065B G4 20S/830_840_865 PSU-E D200 PG	(ANSI3000K, 0.4339;, 0.4033 ; 4000K0.3761;0.3658 ; ANSI6500K0.3123;0.3283) 5SDCM

© 2026 Signify Holding. All rights reserved. The information provided herein is subject to change, without notice. Signify does not give any representation or warranty as to the accuracy or completeness of the information included herein and shall not be liable for any action in reliance thereon. The information presented in this document is not intended as any commercial offer and does not form part of any quotation or contract, unless otherwise agreed by Signify. Philips and the Philips Shield Emblem are registered trademarks of Koninklijke Philips N.V.