PHILIPS

DN016B LED20/WW 20W 100-240V D125 RD ND

929002374812



SmartBright LED Downlight DN016, 20 W, 2000 lm, 3000 K, Wide beam, White

Plastic, White, Power supply unit (On/Off), 2000 lm, 20 W, 100 lm/W, 3000 K, (0.440, 0.4030) 6SDCM, Wide beam, Matte, Polycarbonate, IP20 | Finger-protected, IK03 | 0.3 J, Safety class I, Flying leads/wires

General Information

Light source replaceable	No
Number of gear units	1 unit
Driver included	Yes
Lighting Technology	LED
Warranty period	3 years

Light Technical

Luminous Flux	2,000 lm
Correlated Color Temperature (Nom)	3000 K
Luminous Efficacy (rated) (Nom)	100 lm/W
Color rendering index (CRI)	80
Light source color	830 warm white
Optic type	Wide beam
Luminaire light beam spread	110°

Operating and Electrical

Input Voltage	100 to 240 V
Line Frequency	50 or 60 Hz
Input Frequency	50 or 60 Hz
Inrush current	13 A
Inrush time	0.31 ms
Power Consumption	20 W
Power Factor (Fraction)	0.5
Connection	Flying leads/wires
Cable	Cable 0.2 m without plug
Number of products on MCB of 16 A type B	31
Suitable for random switching	Not applicable
Protection class IEC	Safety class I

Controls and Dimming

Dimmable	No
Driver/power unit/transformer	Power supply unit (On/Off)
Constant light output	No
Maximum dim level	Not applicable

Mechanical and Housing

Housing Material	Plastic
Reflector material	-
Optic material	Polycarbonate
Optical cover material	Polycarbonate
Fixation material	Aluminum
Housing Color	White
Optical cover finish	Matte
Overall height	47 mm
Overall diameter	168 mm
Ingress protection code	IP20 [Finger-protected]
Mech. impact protection code	IK03 [0.3 J]
Net Weight (Piece)	0.220 kg

Approval and Application

Glow-wire test	Temperature 650 °C, duration 30 s
Flammability mark	For mounting on normally flammable surfaces
EU RoHS compliant	Yes
Ambient temperature range	-20 to +40 °C

Initial Performance (IEC Compliant)

Luminous flux tolerance	+/-10%
Initial chromaticity	(0.440, 0.4030) 6SDCM
Power consumption tolerance	+/-10%

Over Time Performance (IEC Compliant)

Driver failure rate at 5000 h	0.012 %
Median useful life L70B50	30,000 hour(s)

Product Data

Order product name	DN016B LED20/WW 20W 100-240V D125 RD ND
Full product name	DN016B LED20/WW 20W 100-240V D125 RD ND
Full product code	871869975919300
Order code	929002374812
Material Nr. (12NC)	929002374812
Numerator - Quantity Per Pack	1
EAN/UPC - Product/Case	8718699759193
Numerator - Packs per outer box	12
EAN/UPC - Case	8718699759209

Dimensional drawing

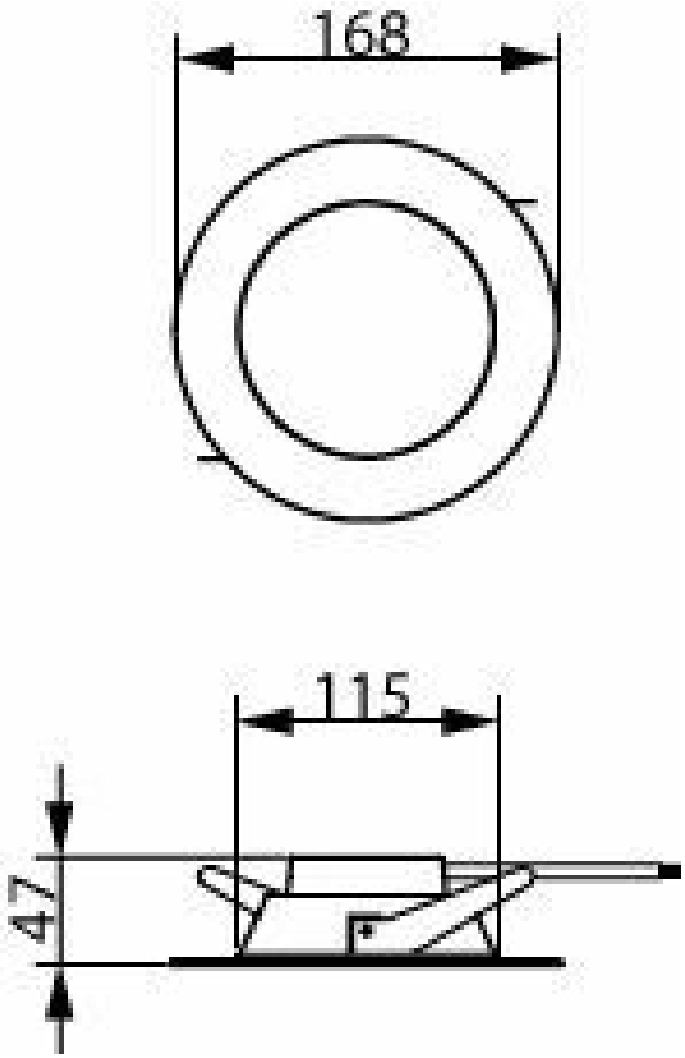

Photometric data

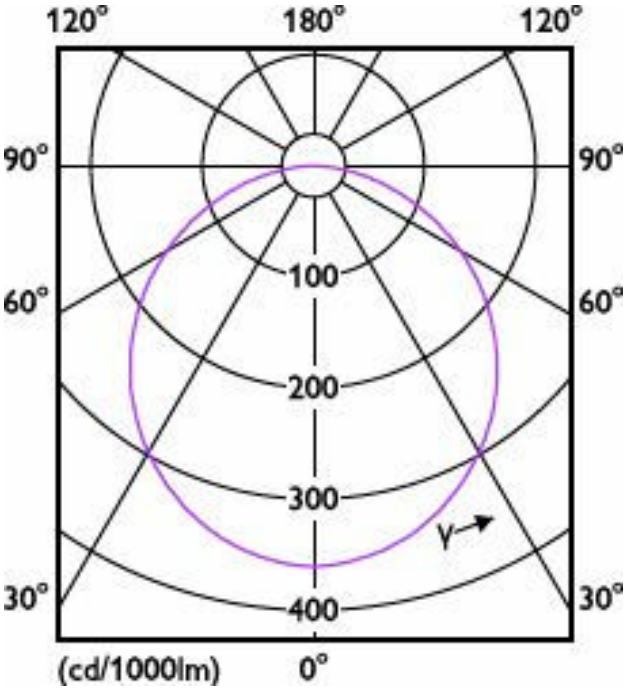

Light Distribution Diagram - DN016B LED20/WW 20W 100-240V D125 RD ND

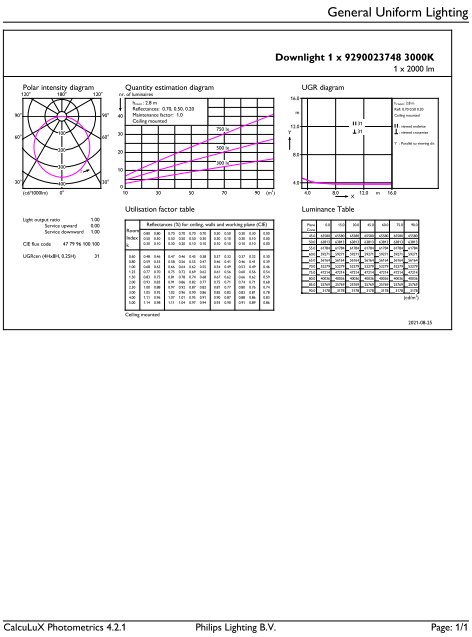

General uniform lighting - DN016B LED20/WW 20W 100-240V D125 RD ND

Related Documents

Documents and certificates	Document Name	Download
Environmental Product Declaration	Philips-DL262-12W-DL262-Ref-929003284623-EPD.pdf	Download

Photometry and lighting design	Document Name	Download
IES File	Downlight_DN016B_WW_20W_D125_RD_ND-IES.ies	Download

© 2026 Signify Holding. All rights reserved. The information provided herein is subject to change, without notice. Signify does not give any representation or warranty as to the accuracy or completeness of the information included herein and shall not be liable for any action in reliance thereon. The information presented in this document is not intended as any commercial offer and does not form part of any quotation or contract, unless otherwise agreed by Signify. Philips and the Philips Shield Emblem are registered trademarks of Koninklijke Philips N.V.