PHILIPS

**BY325P LED100S CW PSU GR FG NB XTFCL V1**

919515812635




# An Energy efficient Well Glass for Industrial and commercial application

Philips DuraLED Highbay is a functional lighting by combining cost-efficiency with clean design. Following the success of Maxolid family, DuraLED Highbay comes as a big surprise gift for industrial Highbay lighting solution with desirable preposition that offers customers all the benefits of LED lighting – fresh light quality, longer service lifetime, reduced energy consumption and less maintenance – from a trusted manufacturer. At the same time, it delivers clear benefits for the installer too. The luminaire can be installed on the existing grid. Electrical connection is straightforward: there is no need to open the luminaire for installation. DuraLED Highbay is a perfect LED replacement for HPI 250/400W luminaires, allowing you to bright up your warehouses, assembly lines, supermarkets, and sports recreational spaces in a smarter way. This highbay improves the total cost of ownership and provides optionally DALI dimming for even further savings.

## Warnings and Safety

- Meant for use in Indoor Industrial environment only

## General Information

| | |
|---|---|
| Driver included | Yes |
| Light source engine type | LED |
| Warranty period | 2 years |

## Light Technical

| | |
|---|---|
| Luminous Flux | 10,000 lm |
| Correlated Color Temperature (Nom) | 6500 K |
| Luminous Efficacy (rated) (Nom) | 125 lm/W |
| Color rendering index (CRI) | >80 |
| Beam angle of light source | 30 degree(s) |
| Light source color | 865 cool daylight |
| Optic type | Beam angle 60° |
| Luminaire light beam spread | 60° |

## Operating and Electrical

| | |
|---|---|
| Input Voltage | 120 to 277 V |
| Line Frequency | 50 Hz |
| Power Consumption | 80 W |
| Power Factor (Fraction) | 0.95 |
| Protection class IEC | Safety class I |
| Surge Protection (Common/ Differential) | Surge protection level until 4 kV |

## Controls and Dimming

| | |
|---|---|
| Dimmable | No |
| Control interface | - |

## Mechanical and Housing

| | |
|---|---|
| Housing Material | Aluminum die cast |
| Optic material | Polycarbonate |
| Optical cover material | Polycarbonate |
| Housing Color | Gray |
| Mounting device | Eye-Bolt |
| Optical cover shape | Narrow |
| Material | Aluminum |
| Ingress protection code | IP66 [Dust penetration-protected, jet-proof] |
| Mech. impact protection code | IK08 [5 J vandal-protected] |
| Optical cover type | Tempered glass |
| Net Weight (Piece) | 5.000 kg |

## Approval and Application

| | |
|---|---|
| Flammability mark | For mounting on normally flammable surfaces |
| Ambient temperature range | 0 to +45 °C |

## Initial Performance (IEC Compliant)

| | |
|---|---|
| Initial chromaticity | <5 |
| Power consumption tolerance | +/-10% |

## Over Time Performance (IEC Compliant)

| | |
|---|---|
| Median useful life L70B50 | 50,000 hour(s) |

## Product Data

| | |
|---|---|
| Order product name | BY325P LED100S CW PSU GR FG NB XTFCL V1 |
| Full product name | BY325P LED100S CW PSU GR FG NB XTFCL V1 |
| Order code | 919515812635 |
| Material Nr. (12NC) | 919515812635 |
| Numerator - Quantity Per Pack | 1 |
| Numerator - Packs per outer box | 1 |

## Dimensional drawing

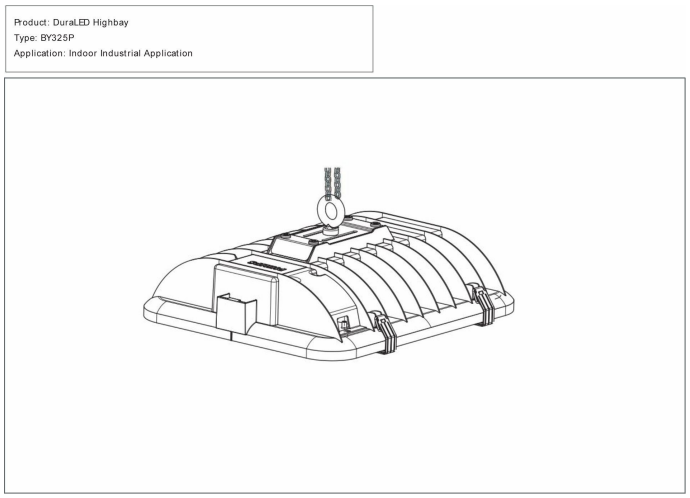


## Related Documents

| Documents and certificates | Document Name | Download |
|---|---|---|
| Installation Instructions | DuraLED_Highbay-BY325P-INI.pdf | Download |

| Photometry and lighting design | Document Name | Download |
|---|---|---|
| IES File | DuraLED Highbay_BY325P LED100S CW PSU GR FG NB XTFCL V1.IES | Download |

© 2026 Signify Holding. All rights reserved. The information provided herein is subject to change, without notice. Signify does not give any representation or warranty as to the accuracy or completeness of the information included herein and shall not be liable for any action in reliance thereon. The information presented in this document is not intended as any commercial offer and does not form part of any quotation or contract, unless otherwise agreed by Signify. Philips and the Philips Shield Emblem are registered trademarks of Koninklijke Philips N.V.