PHILIPS

DynaVision Programmable Xtreme for SON

DDVPXSON



Xtreme drivers for maximum energy savings

Highly reliable and flexible electronic drivers for SON lamps; designed to save energy via integrated controls, and to reduce maintenance costs thanks to 80,000-hour lifetime and integrated lightning protection. The DynaVision Programmable product family is the perfect basis for any sort of lighting management solution.

Benefits

- Enables 2-way communication with the lighting network (via DALI)
- Up to 40% energy saving due to the integrated dimming options and very high driver efficiency
- Minimizes maintenance cost due to the Xtreme lifetime of 80,000 hours and integrated lightning protection

Applications

- Road/highway lighting
- Residential lighting
- City beautification

Features

- Programmable by means of standard digital interface (DALI) and controllable via DALI protocol
- Integrates several control options (DynaDimmer, LineSwitch, AmpDim, Constant Light Output, Adjustable Light Output)
- Xtreme long lifetime of 80,000 hours with minimum 90% survival at Tc = 80 °C
- Xtreme lightning protection 10 kV/5 kA
- Accurate lamp power stabilization of 95-97% over wide mains-voltage range of 180-300 V

Versions



GPPR_IDVxT_0002-Product photo

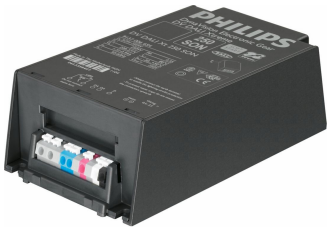

GPPR_IDVLSCPO_0005-Product photo



GPPR IDVLSSON 0002

Dimensional drawing

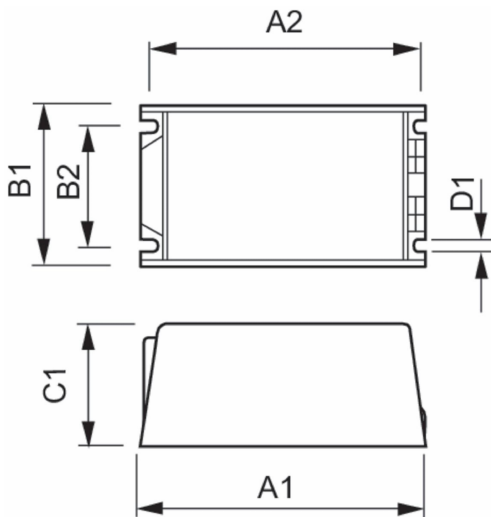

Product	D1	C1	A1	A2	B1	B2
HID-DV PROG Xt 250 SON C2 208-277V	4.8 mm	58.0 mm	169.0 mm	156.0 mm	100.0 mm	81.5 mm

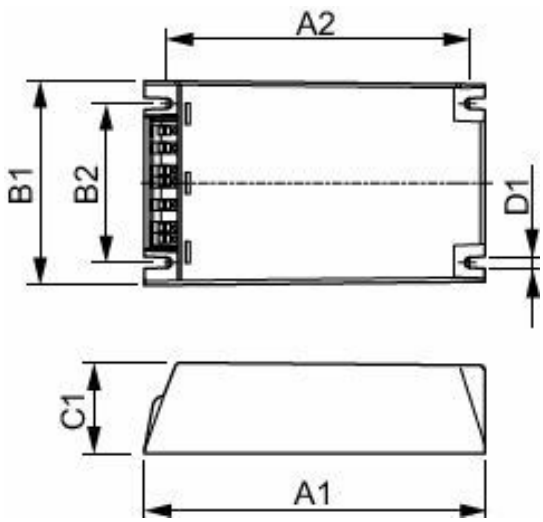

Product	D1	C1	A1	A2	B1	B2
HID-DV PROG Xt 100 SON Q 208-277V	4.5 mm	40.0 mm	150.0 mm	133.6 mm	90.0 mm	70.0 mm
HID-DV PROG Xt 150 SON Q 208-277V	4.5 mm	40.0 mm	150.0 mm	133.6 mm	90.0 mm	70.0 mm
HID-DV PROG Xt 50 SON Q 208-277V	4.5 mm	40.0 mm	150.0 mm	133.6 mm	90.0 mm	70.0 mm
HID-DV PROG Xt 70 SON Q 208-277V	4.5 mm	40.0 mm	150.0 mm	133.6 mm	90.0 mm	70.0 mm

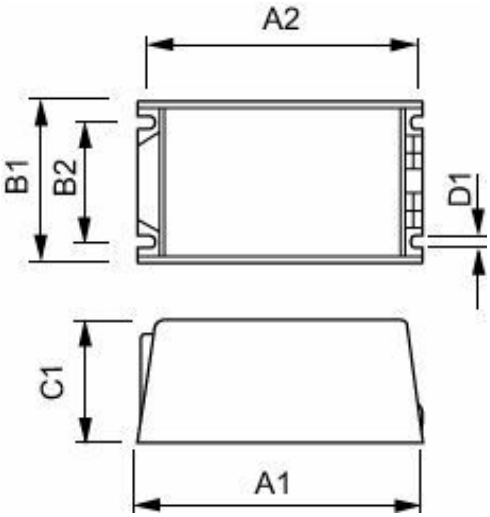

Product	D1	C1	A1	A2	B1	B2
HID-DV PROG Xt 100 SON C1 208-277V	5.0 mm	65.0 mm	150.0 mm	135.9 mm	65.0 mm	46.8 mm
HID-DV PROG Xt 150 SON C1 208-277V	5.0 mm	65.0 mm	150.0 mm	135.9 mm	65.0 mm	46.8 mm
HID-DV PROG Xt 70 SON C1 208-277V	5.0 mm	65.0 mm	150.0 mm	135.9 mm	65.0 mm	46.8 mm

Operating and Electrical

Input Voltage	208-240-277 V
Line Frequency	50 to 60 Hz
Input Frequency	50 to 60 Hz

Operating and Electrical

Order Code	Full Product Name	Number of Products on MCB (16A Type B) (Nom)
913700678666	HID-DV PROG Xt 70 SON C1 208-277V	11
913700678766	HID-DV PROG Xt 100 SON C1 208-277V	5
913700678866	HID-DV PROG Xt 150 SON C1 208-277V	5
913700676766	HID-DV PROG Xt 250 SON C2 208-277V	11
913700693366	HID-DV PROG Xt 50 SON Q 208-277V	11
913700693466	HID-DV PROG Xt 70 SON Q 208-277V	11
913700693566	HID-DV PROG Xt 100 SON Q 208-277V	5
913700693666	HID-DV PROG Xt 150 SON Q 208-277V	5

Mechanical and Housing

Order Code	Full Product Name	Housing
913700678666	HID-DV PROG Xt 70 SON C1 208-277V	C1
913700678766	HID-DV PROG Xt 100 SON C1 208-277V	C1
913700678866	HID-DV PROG Xt 150 SON C1 208-277V	C1
913700676766	HID-DV PROG Xt 250 SON C2 208-277V	C2
913700693366	HID-DV PROG Xt 50 SON Q 208-277V	Q
913700693466	HID-DV PROG Xt 70 SON Q 208-277V	Q
913700693566	HID-DV PROG Xt 100 SON Q 208-277V	Q
913700693666	HID-DV PROG Xt 150 SON Q 208-277V	Q

© 2026 Signify Holding. All rights reserved. The information provided herein is subject to change, without notice. Signify does not give any representation or warranty as to the accuracy or completeness of the information included herein and shall not be liable for any action in reliance thereon. The information presented in this document is not intended as any commercial offer and does not form part of any quotation or contract, unless otherwise agreed by Signify. Philips and the Philips Shield Emblem are registered trademarks of Koninklijke Philips N.V.