PHILIPS

# Essential SmartBright Panel

RC037



## More reliable, more professional, the most affordable LED solution for offices.

The Philips Essential SmartBright range is the most cost-effective LED solution, offering qualified and reliable lighting in work areas, with an extended life cycle, creating a brighter and healthier office environment.

### Benefits

- Slim and elegant design: panel height of about 3.5cm, seamless frame
- Good quality, easy to use
- No confusion, easy product selection
- Long lifetime
- Flicker free, comfortable light experience

### Applications

- Offices
- Hospitals and Care Centers
- Retails

### Features

- Lumen output 3350 lm: L70 30Khrs
- Color rendering: CRI 80 at SDCM less than 5
- Efficacy 93 lm/W
- Ripple current less than less than 10%
- PstLM limit less than 1.0, SVM less than 1.6

## Versions

RC037 595x595



RC037 CPC 300x1200



RC037 CPC 600x600



RC037 295x1195



## Dimensional drawing

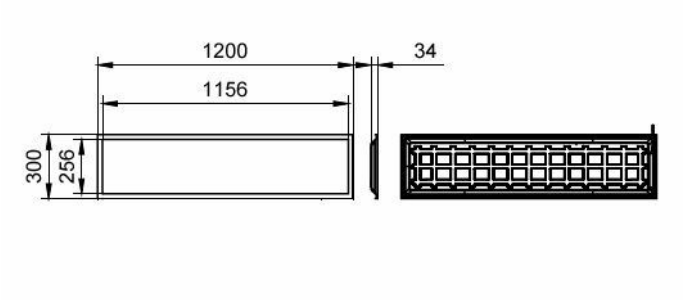


RC037V LED33S/865 CLI CPC W30L120 G3

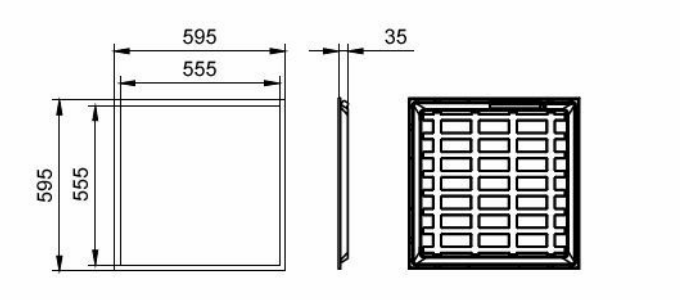


RC037V LED40S/865 CLI W60L60 G3

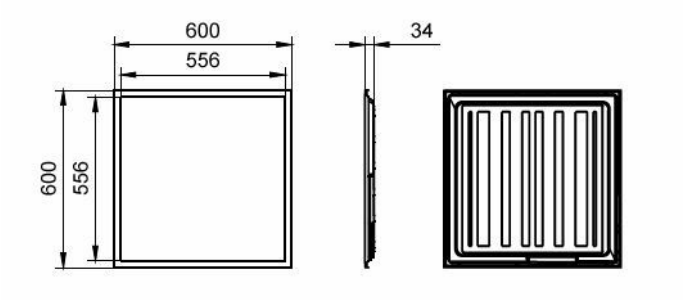


RC037V LED33S/865 CLI CPC W60L60 G3

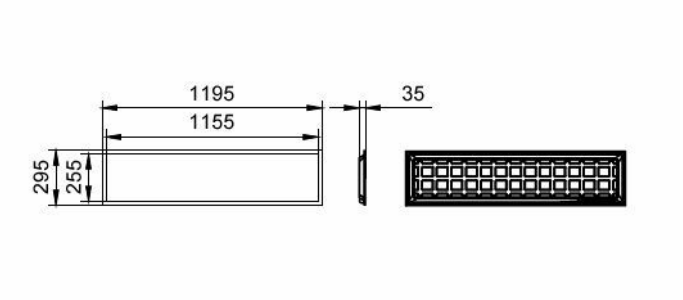


RC037V LED33S/865 CLI W30L120 G3

## Product details



RC037 595x595 backside



RC037 CPC 300x1200 backside



RC037 295x1195 backside



RC037 CPC 600x600 backside

### Light Technical

| | |
|---|---|
| Color rendering index (CRI) | ≥80 |

### Operating and Electrical

| | |
|---|---|
| Input Voltage | 220 to 240 V |
| Line Frequency | 50 or 60 Hz |
| Protection class IEC | Safety class I |

### Controls and Dimming

| | |
|---|---|
| Dimmable | No |

### Mechanical and Housing

| | |
|---|---|
| Housing Color | White RAL 9003 |
| Ingress protection code | IP20 [Finger-protected] |
| Mech. impact protection code | IK02 [0.2 J standard] |
| Optical cover type | PS |

### Approval and Application

| | |
|---|---|
| CE mark | No |
| Ambient temperature range | -10 to +35 °C |

### Initial Performance (IEC Compliant)

| | |
|---|---|
| Luminous flux tolerance | +/-10% |

## Light Technical

| Order Code | Full Product Name | Luminous Flux | Correlated Color Temperature (Nom) | Luminous Efficacy (rated) (Nom) |
|---|---|---|---|---|
| 911401876187 | RC037V LED33S/840 CLI W60L60 G3 | 3,350 lm | 4000 K | 93 lm/W |
| 911401876287 | RC037V LED33S/865 CLI W60L60 G3 | 3,350 lm | 6500 K | 93 lm/W |
| 911401876587 | RC037V LED40S/865 CLI W60L60 G3 | 4,000 lm | 6500 K | 95 lm/W |
| 911401876987 | RC037V LED33S/840 CLI CPC W30L120 G3 | 3,350 lm | 4000 K | 93 lm/W |
| 911401877087 | RC037V LED33S/865 CLI CPC W30L120 G3 | 3,350 lm | 6500 K | 93 lm/W |
| 911401876787 | RC037V LED33S/840 CLI CPC W60L60 G3 | 3,350 lm | 4000 K | 93 lm/W |
| 911401878587 | RC037V LED33S/865 CLI CPC W60L60 G3 | 3,350 lm | 6500 K | 93 lm/W |
| 911401876487 | RC037V LED33S/865 CLI W30L120 G3 | 3,350 lm | 6500 K | 93 lm/W |
| 911401878687 | RC037V LED33S/840 CLI W30L120 G3 | 3,350 lm | 4000 K | 93 lm/W |
| 911401878787 | RC037V LED40S/865 CLI W30L120 G3 | 4,000 lm | 6500 K | 95 lm/W |

## Operating and Electrical

| Order Code | Full Product Name | Power Consumption |
|---|---|---|
| 911401876187 | RC037V LED33S/840 CLI W60L60 G3 | 36 W |
| 911401876287 | RC037V LED33S/865 CLI W60L60 G3 | 36 W |
| 911401876587 | RC037V LED40S/865 CLI W60L60 G3 | 42 W |
| 911401876987 | RC037V LED33S/840 CLI CPC W30L120 G3 | 36 W |
| 911401877087 | RC037V LED33S/865 CLI CPC W30L120 G3 | 36 W |
| 911401876787 | RC037V LED33S/840 CLI CPC W60L60 G3 | 36 W |
| 911401878587 | RC037V LED33S/865 CLI CPC W60L60 G3 | 36 W |
| 911401876487 | RC037V LED33S/865 CLI W30L120 G3 | 36 W |
| 911401878687 | RC037V LED33S/840 CLI W30L120 G3 | 36 W |
| 911401878787 | RC037V LED40S/865 CLI W30L120 G3 | 42 W |

© 2026 Signify Holding. All rights reserved. The information provided herein is subject to change, without notice. Signify does not give any representation or warranty as to the accuracy or completeness of the information included herein and shall not be liable for any action in reliance thereon. The information presented in this document is not intended as any commercial offer and does not form part of any quotation or contract, unless otherwise agreed by Signify. Philips and the Philips Shield Emblem are registered trademarks of Koninklijke Philips N.V.