PHILIPS

WL345W 1xTUV T5 25W HFS

919206000011



WL345W | PHILIPS UV-C DISINFECTION UPPER AIR, 1, HF-S | HF Selectalume, White and black, 29.6 W, 230 V

As part of the Philips UV-C disinfection upper air device series, Philips UV-C disinfection upper air wall mounted is designed to be installed on walls for the disinfection of air in a wide range of applications. Optimized for low ceiling heights, the UV-C rays are distributed at device level and above. The beam of UV-C rays is controlled by specific reflectors and the louvre design. This allows for the disinfection of the air in a space, while ensuring that day-to-day business activities can continue underneath the area where the device is active.

Warnings and Safety

- DANGER: Risk Group 3 UV product. Like any disinfection system, UV-C lamps and devices must be installed and used in the correct way. Direct exposure to UV-C can be dangerous and result in a sunburn-like reaction to the skin and serious damage to the cornea.As UV-C is invisible to the eye, the UV-C upper air device must be installed together with adequate safeguards to ensure that the UV-C upper air device can be operated in a safe way. The UV-C upper air device are only to be used as components in a system that consists of adequate safety safeguards such as, but not limited to, those indicated in the mounting instructions and/or user manuals.Direct exposure to UV-C is dangerous. Philips UV-C luminaires systems must only be sold through qualified partners and installed by professionals according to our stringent safety and legal requirements. Our UV-C products are not meant to be used in applications or activities which may cause and/or lead to death, personal injury and/or damage to the environment.
- [1] According to results obtained from a laboratory test conducted by Innovative Bioanalysis, a CAP, CLIA, AABB Certified Safety Reference Laboratory, in a room with sufficient air circulation. For more information, please refer to the test report available in the "related tools" part of this webpage

General Information

Number of gear units	1 unit
Gear	HF-S [HF Selectalume]
Service tag	Yes
Warranty period	1 years
Sustainability rating	Unclassified

Light Technical

Number of light sources	1
Beam angle of light source	- degree(s)
Optic type	Lamellae louver
Luminaire light beam spread	-

Operating and Electrical

Input Voltage	230 V
Line Frequency	50 Hz
Inrush current	18 A
Inrush time	0.35 ms
Power Consumption	29.6 W
Power Factor (Fraction)	0.98
Connection	Push-in connector 3-pole
Cable	-
Number of products on MCB of 16 A type B	28
Suitable for random switching	Yes
Protection class IEC	Safety class I

Controls and Dimming

Dimmable	No
Control interface	-
Maximum dim level	Not applicable

Mechanical and Housing

Housing Material	Aluminum
Reflector material	Aluminum
Optic material	Aluminum
Housing Color	White and black
Mounting device	Wall-mounting bracket
Overall length	553 mm
Overall width	185 mm
Overall height	140 mm
Dimensions (Height x Width x Depth)	140 x 185 x 553 mm
Ingress protection code	IP20 [Finger-protected]
Mech. impact protection code	IK02 [0.2 J standard]
Net Weight (Piece)	6.290 kg

Approval and Application

Glow-wire test	Temperature 650 °C, duration 30 s
Flammability mark	-
CE mark	Yes
ENEC mark	-
Photobiological risk	Photobiological risk group 3 @200mm to EN62778
EU RoHS compliant	Yes
Performance ambient temperature Tq	25 °C
Ambient temperature range	+10 to +40 °C

UV

UV-C radiation	0.375 W
UV-C irradiance defined at 2m	356 mW/m²
UV-C irradiance defined at 0.2m	4,266 mW/m²

Initial Performance (IEC Compliant)

Power consumption tolerance	+/-10%

Sustainability Data

Repair class	Repair Class D, this product is not designed to be repaired.

Dimensional drawing

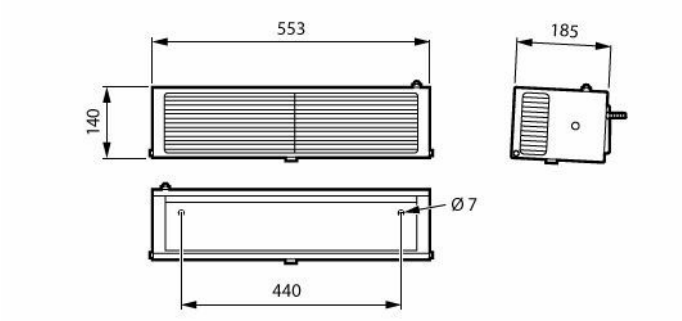

Product Data

Order product name	WL345W 1xTUV T5 25W HFS
Full product name	WL345W 1xTUV T5 25W HFS
Full product code	871869690445900
Order code	919206000011
Material Nr. (12NC)	919206000011
Numerator - Quantity Per Pack	1
EAN/UPC - Product/Case	8718696904459
Numerator - Packs per outer box	1
EAN/UPC - Case	8718696904459
Product family code	WL345W [PHILIPS UV-C DISINFECTION UPPER AIR]

Related Documents

Documents and certificates	Document Name	Download
Installation Instructions	442294851683_MI_WL345W 1xTUV T5 25W HFS_2021_06_09.pdf	Download
Installation Instructions	WL345W-Wall-mount-standard-output-Mounting-instructions-user-manual.pdf	Download

© 2026 Signify Holding. All rights reserved. The information provided herein is subject to change, without notice. Signify does not give any representation or warranty as to the accuracy or completeness of the information included herein and shall not be liable for any action in reliance thereon. The information presented in this document is not intended as any commercial offer and does not form part of any quotation or contract, unless otherwise agreed by Signify. Philips and the Philips Shield Emblem are registered trademarks of Koninklijke Philips N.V.