PHILIPS

Infrared Lamps Human Use

IHEALIR



A comfortable heat source for your muscles

Signify offers two infrared lamp types for use in heat radiating devices for human applications These Philips infrared lamps have a wavelength spectrum with a pronounced peak at approximately 1000 nm in the deep-penetrating IR-A range. IR-A range has a greater penetrating power, which means that the heat is dissipated in a larger skin volume thus creating a more pleasant and diffuse warmth. Philips infrared lamps for human applications are designed to support relaxation of the muscular tension. These lamps can be used to provide warmth to the human skin, muscles and joints.

Benefits

- Optimal warmth penetration of skin and muscles for a gentle, pleasant effect of comfort
- 90% of energy transmitted as infrared heat
- Instant, accurately controllable source of radiant heat

Applications

- Infrared heat devices for domestic and professional use

Features

- Designed exclusively for human applications
- Optimised design of the lamps to direct heat energy to the front

- Powerful lamps that can be dimmed (via device) to meet the user's requirement
- Good balance between lamp lifetime and heat output
- Red-colour filters to reduce visible light waves and glare

- When used correctly, lamp breaking is very unlikely. If a lamp breaks, carefully remove the parts (with gloves or protective tools to avoid skin cuts). Put the parts in a sealable plastic bag and take it to your local waste facilities for recycling. Do not use a vacuum cleaner.
- Follow recommended time and distance of exposure of the device with which this lamp is used. Longer / closer than recommended exposure to infrared heat may cause skin burn or other undesirable skin-protective reactions.
- Follow device instructions for eye and skin safety and protection. Do not direct the lamp into eyes, always protect eyes, including as recommended by manufacturer of device.

Versions



R95 Hardglass



LPPR IRINPHI E27 PAR38

Dimensional drawing

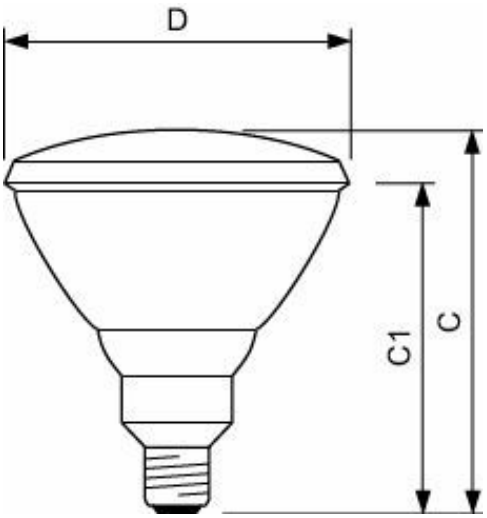

Product	D	C (max)	C1 (max)
PAR38 IR 150W E27 125-130V Red 1CT/12	121 mm	136 mm	124 mm
PAR38 IR 150W E27 230V Red 1CT/12	121 mm	136 mm	124 mm
PAR38 IR 150W E27 230V Red UNP/20	121 mm	136 mm	124 mm

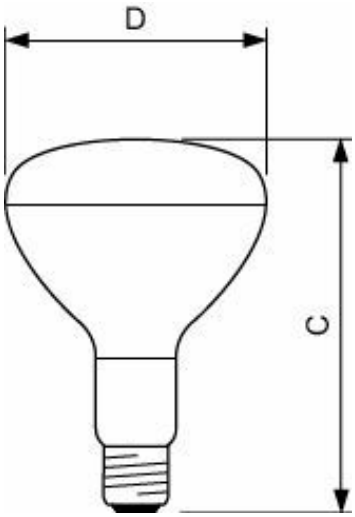

Product	D	C
R95 IR 100W E27 230V Red hard 1CT/20(CN)	95 mm	130 mm

General Information

Cap-Base	E27
Nominal lifetime	300 hour(s)
Rated Lifetime (Hours)	300 hour(s)

Controls and Dimming

Dimmable	Yes

Mechanical and Housing

Bulb Finish	Red
Bulb Material	Hard Glass

General Information

Order Code	Full Product Name	Operating Position
923244544201	R95 IR 100W E27 230V Red hard 1CT/20(CN)	UNIVERSAL
923806635606	PAR38 IR 150W E27 125-130V Red 1CT/12	VBU/VBD90
923806644208	PAR38 IR 150W E27 230V Red UNP/20	VBU/VBD90
923806644210	PAR38 IR 150W E27 230V Red 1CT/12	VBU/VBD90

Operating and Electrical

Order Code	Full Product Name	Power Consumption	Voltage (Nom)
923244544201	R95 IR 100W E27 230V Red hard 1CT/20(CN)	100 W	220-240 V
923806635606	PAR38 IR 150W E27 125-130V Red 1CT/12	150 W	125-130 V
923806644208	PAR38 IR 150W E27 230V Red UNP/20	150 W	230 V
923806644210	PAR38 IR 150W E27 230V Red 1CT/12	150 W	230 V

Mechanical and Housing

Order Code	Full Product Name	Bulb Shape
923244544201	R95 IR 100W E27 230V Red hard 1CT/20(CN)	R95
923806635606	PAR38 IR 150W E27 125-130V Red 1CT/12	PAR38
923806644208	PAR38 IR 150W E27 230V Red UNP/20	PAR38
923806644210	PAR38 IR 150W E27 230V Red 1CT/12	PAR38

© 2026 Signify Holding. All rights reserved. The information provided herein is subject to change, without notice. Signify does not give any representation or warranty as to the accuracy or completeness of the information included herein and shall not be liable for any action in reliance thereon. The information presented in this document is not intended as any commercial offer and does not form part of any quotation or contract, unless otherwise agreed by Signify. Philips and the Philips Shield Emblem are registered trademarks of Koninklijke Philips N.V.