PHILIPS

BN131C LED SWT/SCCT L1200 PSU Slim

911401801484

Smartbright Dual select Batten BN131C, 17 W, 35 W, 4100 lm, 4000 K, 5000 K, 6500 K

New Philips Dual Select batten offers exceptional value. It is Perfect for your everyday lighting installations. Available in 2 standard sizes, it has option of 3 CCT selection and 2 Lumen output selection to provide flexibility to customer and reduce customer stocking requirements.

General Information

Light source engine type	LED
Value ladder	Value

Light Technical

Luminous Flux	4,100 lm
Correlated Color Temperature (Nom)	4000 K
Luminous Efficacy (rated) (Nom)	110 lm/W
Color rendering index (CRI)	>80
Light source color	White
Effective projected area	0.0768 m^2

Operating and Electrical

Input Voltage	220 to 240 V
Line Frequency	50 or 60 Hz
Inrush current	7.3 A
Power Consumption	17 W
Power Factor (Fraction)	0.9
Number of products on MCB of 16 A type B	30
Protection class IEC	Safety class I

Controls and Dimming

Dimmable	No
Control interface	-

Mechanical and Housing

Housing Material	Steel
Optical cover material	Polycarbonate
Housing Color	White RAL9016
Optical cover finish	Opal
Overall length	1,200 mm
Overall width	64 mm
Overall height	64 mm
Dimensions (Height x Width x Depth)	64 x 64 x 1200 mm
Ingress protection code	IP20 [Finger-protected]
Mech. impact protection code	IK04 [0.5 J standard plus]
Optical cover type	-
Net Weight (Piece)	1.070 kg

Approval and Application

Flammability mark	For mounting on normally flammable surfaces
CE mark	No
Ambient temperature range	-20 to +40 °C

Dimensional drawing

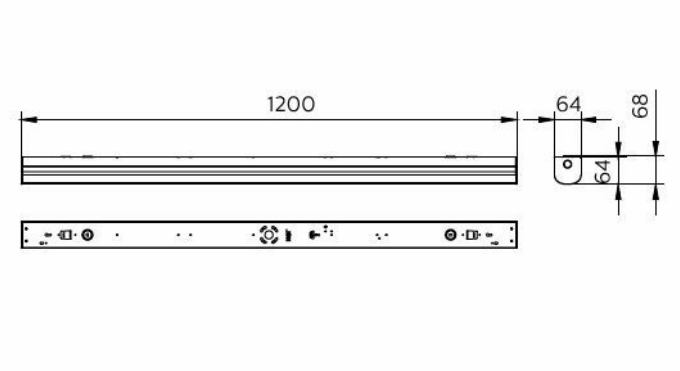

Initial Performance (IEC Compliant)

Luminous flux tolerance	+/-10%
Initial chromaticity	4000K (0.3825 , 0.3798), 6500K (0.3130 Y 0.3290),SDCM≤5
Power consumption tolerance	+/-10%

Product Data

Order product name	BN131C LED SWT/SCCT L1200 PSU Slim
Full product name	BN131C LED SWT/SCCT L1200 PSU Slim
Full product code	871951454916699
Order code	911401801484
Material Nr. (12NC)	911401801484
Numerator - Quantity Per Pack	1
EAN/UPC - Product/Case	8719514549166
Numerator - Packs per outer box	8
EAN/UPC - Case	8719514549227

Related Documents

Documents and certificates	Document Name	Download
Installation Instructions	Mounting instruction BN131 BN132.pdf	Download

Photometry and lighting design	Document Name	Download
IES File	BN131C LED SWT SCCT L1200 PSU Slim 5000Khigh.IES	Download

© 2026 Signify Holding. All rights reserved. The information provided herein is subject to change, without notice. Signify does not give any representation or warranty as to the accuracy or completeness of the information included herein and shall not be liable for any action in reliance thereon. The information presented in this document is not intended as any commercial offer and does not form part of any quotation or contract, unless otherwise agreed by Signify. Philips and the Philips Shield Emblem are registered trademarks of Koninklijke Philips N.V.