PHILIPS

**RS156B LED12-WB-/830 D68 PSR PI6 WH**

911401821584



# CoreLine Recessed Spot gen2, Adjustable, 12.3 W, D68 mm, 1300 lm, 3000 K, Phase-cut dim, Wide beam, White, IP20/44

CoreLine Recessed Spot gen2, Adjustable, D68 mm, Aluminum die-cast, White, Recessed, Power supply unit regulating external, 1300 lm, 12.3 W, 105 lm/W, 3000 K, (0.43, 0.40) SDCM <5, Wide beam, Polycarbonate, IP20/44 | Finger-protected; wire-protected, splash-proof, IK03 | 0.3 J, Safety class II, Cable 0.25 m with connector 3-pole, Push-in connector 3-pole

## Warnings and Safety

- The luminaire should be installed and disassembled by a qualified electrician and wired in accordance with the latest IEE electrical regulations or the national requirements, as per the product mounting instructions.

## General Information

| | |
|---|---|
| Light source replaceable | No |
| Number of gear units | 1 unit |
| Driver included | Yes |
| Sustainability rating | Unclassified |
| Service tag | No |
| Lighting Technology | LED |
| Value ladder | Performance |
| Warranty period | 5 years |

## Light Technical

| | |
|---|---|
| Luminous Flux | 1,300 lm |
| Saturated Red (R9) | <50 |
| Correlated Color Temperature (Nom) | 3000 K |
| Luminous Efficacy (rated) (Nom) | 105 lm/W |
| Color rendering index (CRI) | >80 |
| Beam angle of light source | 120 degree(s) |
| Light source color | 830 warm white |
| Optic type | Wide beam |
| Luminaire light beam spread | 36° |
| Unified glare rating CEN | 33 |

## Operating and Electrical

| | |
|---|---|
| Input Voltage | 220 to 240 V |
| Line Frequency | 50 or 60 Hz |
| Initial CLO power consumption | - W |
| Average CLO power consumption | - W |
| Inrush current | 7 A |
| Inrush time | 0.3 ms |
| Power Consumption | 12.3 W |
| Power Factor (Fraction) | 0.9 |
| Connection | Push-in connector 3-pole |
| Cable | Cable 0.25 m with connector 3-pole |
| Number of products on MCB of 16 A type B | 40 |
| Suitable for random switching | Yes |
| Protection class IEC | Safety class II |
| Total harmonic distortion | 30 % |

## Controls and Dimming

| | |
|---|---|
| Dimmable | Yes |
| Driver/power unit/transformer | Power supply unit regulating external |
| Control interface | Phase-cut dim |
| Constant light output | No |
| Maximum dim level | 10% (depends on dimmer, ELV) |

## Mechanical and Housing

| | |
|---|---|
| Housing Material | Aluminum die-cast |
| Reflector material | - |
| Optic material | Polycarbonate |
| Optical cover material | Polycarbonate |
| Fixation material | Steel |
| Housing Color | White |
| Optical cover finish | - |
| Overall height | 62 mm |
| Overall diameter | 85 mm |
| Nominal Ceiling cut-out diameter | 68 mm |
| Ingress protection code | IP20/44 [Finger-protected; wire-protected, splash-proof] |
| Mech. impact protection code | IK03 [0.3 J] |
| Mounting | Recessed |
| Net Weight (Piece) | 0.290 kg |

## Approval and Application

| | |
|---|---|
| Glow-wire test | Temperature 650 °C, duration 30 s |
| Flammability mark | For mounting on normally flammable surfaces |
| CE mark | Yes |
| ENEC mark | ENEC mark |
| Photobiological risk | Photobiological risk group 1 @200mm to EN62778 |
| Photobiological risk specification | 0.2 m |
| EU RoHS compliant | Yes |
| Performance ambient temperature Tq | 25 °C |
| Flickering value (PstLM) - Flickering value as per EN 61000-3-3 | 1 |
| Stroboscopic effect visibility measure (SVM) | 0.4 |
| Ambient temperature range | 0 to +35 °C |

## Initial Performance (IEC Compliant)

| | |
|---|---|
| Luminous flux tolerance | +/-10% |
| Initial chromaticity | (0.43, 0.40) SDCM <5 |
| Power consumption tolerance | +/-10% |
| Standard Deviation of Colour Matching (McAdam ellipse) | SDCM≤5 |

## Over Time Performance (IEC Compliant)

| | |
|---|---|
| Control gear failure rate at median useful life 50000 h | 5 % |
| Lumen maintenance (EN-IEC 62722-2-1) at median useful life* 35000 h | - |
| Lumen maintenance (EN-IEC 62722-2-1) at median useful life* 50000 h | L70 |
| Lumen maintenance (EN-IEC 62722-2-1) at median useful life* 75000 h | - |
| Lumen maintenance (EN-IEC 62722-2-1) at median useful life* 100000 h | - |

## Sustainability Data

| | |
|---|---|
| Repair class | Repair Class D, this product is not designed to be repaired. |
| Embedded carbon (A1-A3) | 7.09 kg $CO_2$e |
| Product non-virgin material ratio | 8.14 % |
| Recyclable content ratio of the finished product | 46 % |
| GWP total B6 (kg CO2eq) Declared Unit | Please calculate using your local energy mix value: Power Declared Unit (kW) * Service life (hrs) Declared Unit * Energy mix (kg CO2eq / kwh) |
| GWP total B6 (kg CO2eq) Functional Unit | Please calculate using your local energy mix value: Power Declared Unit (kW) * 1000 (lm) /lumen output (lm) Declared Unit * 35000 (hrs) * Energy mix (kg CO2 eq / kwh) |
| Non-virgin material ratio of the packaging | Cardboard > 80% recycled |
| Packaging Recyclable content ratio | Cardboard recycling rate > 80% |
| Packaging Material | Cardboard |

## Product Data

| | |
|---|---|
| Order product name | RS156B LED12-WB-/830 D68 PSR PI6 WH |
| Full product name | RS156B LED12-WB-/830 D68 PSR PI6 WH |
| Full product code | 871951494089599 |
| Order code | 911401821584 |
| Material Nr. (12NC) | 911401821584 |
| Numerator - Quantity Per Pack | 1 |
| EAN/UPC - Product/Case | 8719514940895 |
| Numerator - Packs per outer box | 18 |
| EAN/UPC - Case | 8719514941281 |

## Dimensional drawing

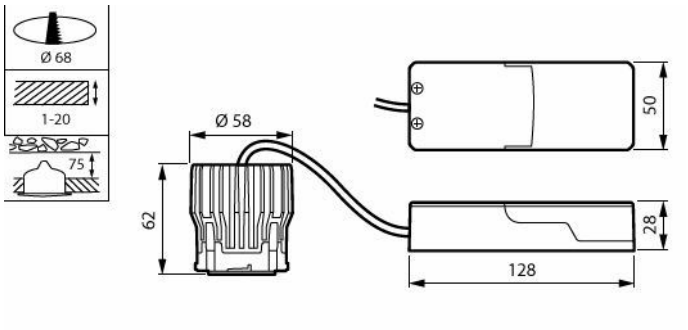


## Polar normal diagrams

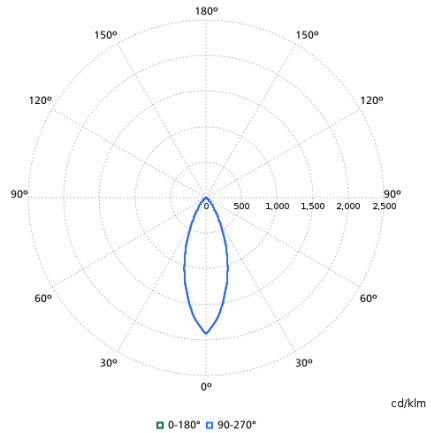


## Related Documents

| Documents and certificates | Document Name | Download |
|---|---|---|
| Environmental Product Declaration | EPD-Philips-CoreLine-Recessed-Spot-gen2-RS156B-LED12-WB-830-D68-PSR-PI6-WH-911401821584.pdf | Download |
| Installation Instructions | CL-Recessed-Spot-RS155-156-D68-650-900-1200lm-PSR-INI-202609.pdf | Download |

| Photometry and lighting design | Document Name | Download |
|---|---|---|
| IES File | rs156b-led12-wb-830-d68-psr-pi6-wh-911401821584.ies | Download |
| LDT File | rs156b-led12-wb-830-d68-psr-pi6-wh-911401821584.ldt | Download |
| ROLF File | rs156b-led12-wb-830-d68-psr-pi6-wh-911401821584.rolfz | Download |
| ULD File | rs156b-led12-wb-830-d68-psr-pi6-wh-911401821584.uld | Download |
| Revit file | rs156b-led12-wb-830-d68-psr-pi6-wh-911401821584.zip | Download |

© 2026 Signify Holding. All rights reserved. The information provided herein is subject to change, without notice. Signify does not give any representation or warranty as to the accuracy or completeness of the information included herein and shall not be liable for any action in reliance thereon. The information presented in this document is not intended as any commercial offer and does not form part of any quotation or contract, unless otherwise agreed by Signify. Philips and the Philips Shield Emblem are registered trademarks of Koninklijke Philips N.V.