PHILIPS

WT120C G2 LED27S/840 PSU L1200 BN

911401826785



CoreLine Waterproof, (in brown Eco Packaging), 21 W, L1200 mm, 2700 lm, 4000 K, Symmetrical, Clear, IP65, IK08, TW1-ready

(in brown Eco Packaging), L1200 mm, Polycarbonate, Grey, Power supply unit (On/Off), 2700 lm, 21 W, 126 lm/W, 4000 K, (0.38,0.38)SDCM<=3, Symmetrical, Clear, Polycarbonate, IP65 | Dust penetration-protected, jet-proof, IK08 | 5 J vandal-protected, Safety class I, Push-in connector 3-pole, Simple Connection and removable cover available for feed-through wiring 1-phase (internal wiring is not included)

Warnings and Safety

- UV radiation will damage the material over time resulting in loss of waterproof sealing and IP66 rating.
- Do not install the luminaire in locations where it will be exposed to direct sunlight.

General Information

Light source replaceable	No
Number of gear units	1 unit
Driver included	Yes
Sustainability rating	Unclassified
Service tag	Yes
Lighting Technology	LED
Value ladder	Performance
Warranty period	5 years

Light Technical

Luminous Flux	2,700 lm
Saturated Red (R9)	<50
Correlated Color Temperature (Nom)	4000 K
Luminous Efficacy (rated) (Nom)	126 lm/W
Color rendering index (CRI)	>80
Light source color	840 neutral white
Optic type	Symmetrical
Luminaire light beam spread	110°
Unified glare rating CEN	25

Operating and Electrical

Input Voltage	220 to 240 V
Line Frequency	50 or 60 Hz
Inrush current	3.58 A
Inrush time	0.04 ms
Power Consumption	21 W
Power Factor (Fraction)	0.9
Connection	Push-in connector 3-pole
Cable	-
Number of products on MCB of 16 A type B	80
Suitable for random switching	Yes
Protection class IEC	Safety class I
Feed-through wiring	Simple Connection and removable cover available for feed-through wiring 1-phase (internal wiring is not included)
Total harmonic distortion	20 %

Controls and Dimming

Dimmable	No
Driver/power unit/transformer	Power supply unit (On/Off)
Control interface	-
Constant light output	No

Mechanical and Housing

Housing Material	Polycarbonate
Reflector material	Steel
Optic material	Polycarbonate
Optical cover material	Polycarbonate
Fixation material	Stainless steel
Housing Color	Grey
Optical cover finish	Clear
Overall length	1,215 mm
Overall width	80 mm
Overall height	76 mm
Dimensions (Height x Width x Depth)	76 x 80 x 1215 mm
Ingress protection code	IP65 [Dust penetration-protected, jet-proof]
Mech. impact protection code	IK08 [5 J vandal-protected]
Net Weight (Piece)	1.400 kg

Approval and Application

Glow-wire test	Temperature 850 °C, duration 30 s
Flammability mark	For mounting on easily flammable surfaces
CE mark	Yes
ENEC mark	ENEC mark
Photobiological risk	Photobiological risk group 0 @200mm to EN62778
Photobiological risk specification	0.2 m
EU RoHS compliant	Yes
Performance ambient temperature Tq	25 °C
Flickering value (PstLM) - Flickering value as per EN 61000-3-3	1
Stroboscopic effect visibility measure (SVM)	0.4
Ambient temperature range	-20 to +40 °C

Initial Performance (IEC Compliant)

Luminous flux tolerance	+/-10%
Initial chromaticity	(0.38,0.38)SDCM<=3
Power consumption tolerance	+/-10%

Over Time Performance (IEC Compliant)

Control gear failure rate at median useful life 50000 h	5 %
Lumen maintenance (EN-IEC 62722-2-1) at median useful life* 50000 h	L80
Lumen maintenance (EN-IEC 62722-2-1) at median useful life* 100000 h	L70

Sustainability Data

Repair class	Repair Class C, the driver of this luminaire can be replaced by a service technician. Special care is required during disassembly and reassembly, and specific tools may be required. Parts and documentation are available for a period of time.
Embedded carbon (A1-A3)	10.3 kg CO_2e
Product non-virgin material ratio	11.7 %
Recyclable content ratio of the finished product	53.9 %
GWP total B6 (kg CO2eq) Declared Unit	Please calculate using your local energy mix value: Power Declared Unit (kW) * Service life (hrs) Declared Unit * Energy mix (kg CO2eq / kwh)
GWP total B6 (kg CO2eq) Functional Unit	Please calculate using your local energy mix value: Power Declared Unit (kW) * 1000 (lm) /lumen output (lm) Declared Unit * 35000 (hrs) * Energy mix (kg CO2 eq / kwh)
Non-virgin material ratio of the packaging	Cardboard > 80% recycled
Packaging Recyclable content ratio	Cardboard recycling rate > 80%
Packaging Material	Cardboard

Product Data

Order product name	WT120C G2 LED27S/840 PSU L1200 BN
Full product name	WT120C G2 LED27S/840 PSU L1200 BN
Full product code	872016950221599
Order code	911401826785
Material Nr. (12NC)	911401826785
Numerator - Quantity Per Pack	1
EAN/UPC - Product/Case	8720169502215
Numerator - Packs per outer box	9
EAN/UPC - Case	8720169502246

Dimensional drawing

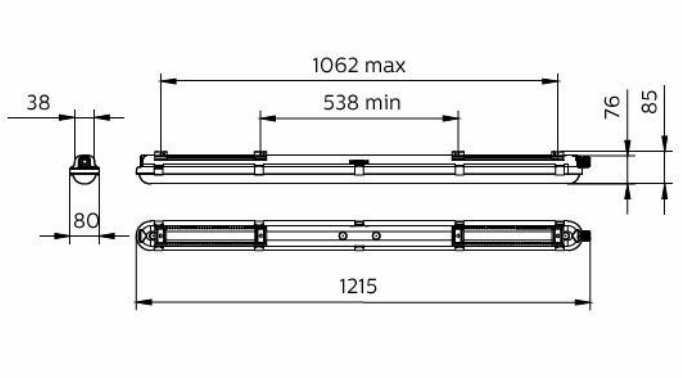

Polar normal diagrams

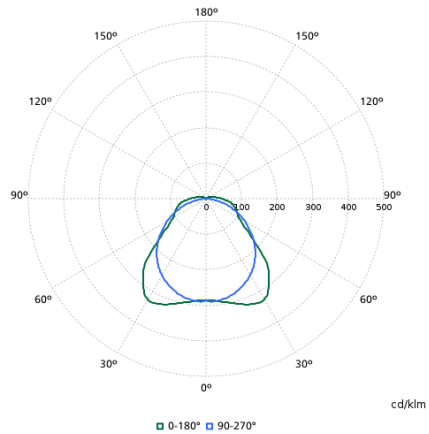

Related Documents

Documents and certificates	Document Name	Download
Environmental Product Declaration	EPD-Philips-CoreLine-Waterproof-911401826785.pdf	Download
Installation Instructions	Manual instruction_CoreLine waterproof WT120C G2 BN_v2023 05.pdf	Download

Photometry and lighting design	Document Name	Download
IES File	wt120c-g2-led27s-840-psu-l1200-bn-911401826785.ies	Download
LDT File	wt120c-g2-led27s-840-psu-l1200-bn-911401826785.ldt	Download
ROLF File	wt120c-g2-led27s-840-psu-l1200-bn-911401826785.rolfz	Download
ULD File	wt120c-g2-led27s-840-psu-l1200-bn-911401826785.uld	Download
Revit file	wt120c-g2-led27s-840-psu-l1200-bn-911401826785.zip	Download

© 2026 Signify Holding. All rights reserved. The information provided herein is subject to change, without notice. Signify does not give any representation or warranty as to the accuracy or completeness of the information included herein and shall not be liable for any action in reliance thereon. The information presented in this document is not intended as any commercial offer and does not form part of any quotation or contract, unless otherwise agreed by Signify. Philips and the Philips Shield Emblem are registered trademarks of Koninklijke Philips N.V.