PHILIPS

**RC132V G6 29_36_43S/ 830_40 PSD W60L60 OC**

911401891285




Multi ColorTemp | Multi Lumen | Service tag

# CoreLine Panel gen6, All-in, 31 W, 22 W, 600x600 mm, VPC, 2900 lm, 3100 lm, 3350 lm, 3600 lm, 4000 lm, 4300 lm, 3000 K, 3500 K, 4000 K, DALI, UGR19

600x600 mm, Visible profile ceiling version, Steel, White, Signal white (RAL9003), Power supply unit with DALI interface, All-in, Multi Lumen, All-in, Multi Color Temperature, 2900 lm, 3100 lm, 3350 lm, 3600 lm, 4000 lm, 4300 lm, 31 W, 22 W, 140 lm/W, 130 lm/W, 3000 K, 3500 K, 4000 K, (0.38, 0.38) SDCM ≤3, UGR19, Beam angle 90°, Microprismatic lens, Polystyrene, IP20/44 | Finger-protected; wire-protected, splash-proof, IK02 | 0.2 J standard, Safety class II, Push-in connector 4-pole, SC | Safety cable

## General Information

| | |
|---|---|
| Number of gear units | 1 unit |
| Driver included | Yes |
| Sustainability rating | Unclassified |
| Service tag | Yes |
| Value ladder | Performance |
| Warranty period | 5 years |

## Light Technical

| | |
|---|---|
| Luminous Flux | 2,900 lm |
| Correlated Color Temperature (Nom) | 3000 K |
| Luminous Efficacy (rated) (Nom) | 140 lm/W |
| Color rendering index (CRI) | >80 |
| Beam angle of light source | 90 degree(s) |
| Light source color | Multi Color Temperature |
| Optic type | Beam angle 90° |
| Luminaire light beam spread | 90° |
| Unified glare rating CEN | 19 |
| All-in Type | All-in, Multi Lumen |

## Operating and Electrical

| | |
|---|---|
| Input Voltage | 220 to 240 V |
| Line Frequency | 50 or 60 Hz |
| Inrush current | 26 A |
| Inrush time | 0.26 ms |
| Power Consumption | 31 W |
| Power Factor (Fraction) | 0.9 |
| Connection | Push-in connector 4-pole |
| Cable | - |
| Number of products on MCB of 16 A type B | 15 |
| Suitable for random switching | Yes |
| Protection class IEC | Safety class II |
| Total harmonic distortion | 20 % |

## Controls and Dimming

| | |
|---|---|
| Dimmable | Yes |
| Driver/power unit/transformer | Power supply unit with DALI interface |
| Control interface | DALI |
| Constant light output | No |
| DALI Standard | DALI-2™ |
| Maximum dim level | 1% |

## Mechanical and Housing

| | |
|---|---|
| Housing Material | Steel |
| Reflector material | Acrylate |
| Optic material | Polystyrene |
| Optical cover material | Polystyrene |
| Fixation material | - |
| Housing Color | White |
| Optical cover finish | Microprismatic lens |
| Overall length | 595 mm |
| Overall width | 595 mm |
| Overall height | 63 mm |
| Dimensions (Height x Width x Depth) | 63 x 595 x 595 mm |
| Compatible ceiling or ceiling installation accessory type | Visible profile ceiling version |
| Ingress protection code | IP20/44 [Finger-protected; wire-protected, splash-proof] |
| Mech. impact protection code | IK02 [0.2 J standard] |
| Safety device | SC [Safety cable] |
| Net Weight (Piece) | 2.260 kg |

## Emergency Operation

| | |
|---|---|
| Central Emergency | No |

## Approval and Application

| | |
|---|---|
| Glow-wire test | Temperature 650 °C, duration 30 s |
| Flammability mark | For mounting on normally flammable surfaces |
| CE mark | Yes |
| ENEC mark | ENEC mark |
| Photobiological risk | Photobiological risk group 0 @200mm to EN62778 |
| Photobiological risk specification | 0.2 m |

| | |
|---|---|
| EU RoHS compliant | Yes |
| Performance ambient temperature Tq | 25 °C |
| Flickering value (PstLM) - Flickering value as per EN 61000-3-3 | 1 |
| Stroboscopic effect visibility measure (SVM) | 0.4 |
| Ambient temperature range | -10 to +35 °C |

## Initial Performance (IEC Compliant)

| | |
|---|---|
| Luminous flux tolerance | -10% / +10% |
| Initial chromaticity | (0.38, 0.38) SDCM ≤3 |
| Power consumption tolerance | +/-10% |

## Over Time Performance (IEC Compliant)

| | |
|---|---|
| Control gear failure rate at median useful life 50000 h | 5 % |
| Lumen maintenance (EN-IEC 62722-2-1) at median useful life* 50000 h | L90 |
| Lumen maintenance (EN-IEC 62722-2-1) at median useful life* 100000 h | L80 |

## Sustainability Data

| | |
|---|---|
| Repair class | Repair Class D, this product is not designed to be repaired. |
| Embedded carbon (A1-A3) | 24.6 kg $CO_2e$ |
| Product non-virgin material ratio | 10.1 % |
| Recyclable content ratio of the finished product | 47.9 % |
| GWP total B6 (kg CO2eq) Declared Unit | Please calculate using your local energy mix value: Power Declared Unit (kW) * Service life (hrs) Declared Unit * Energy mix (kg CO2eq / kwh) |
| GWP total B6 (kg CO2eq) Functional Unit | Please calculate using your local energy mix value: Power Declared Unit (kW) * 1000 (lm) /lumen output (lm) Declared Unit * 35000 (hrs) * Energy mix (kg CO2 eq / kwh) |
| Non-virgin material ratio of the packaging | Cardboard > 80% recycled |
| Packaging Recyclable content ratio | Cardboard recycling rate > 80% |
| Packaging Material | Cardboard |

## Product Data

| | |
|---|---|
| Order product name | RC132V G6 29_36_43S/830_40 PSD W60L60 OC |
| Full product name | RC132V G6 29_36_43S/830_40 PSD W60L60 OC |
| Full product code | 872016973519499 |
| Order code | 911401891285 |
| Material Nr. (12NC) | 911401891285 |
| Numerator - Quantity Per Pack | 1 |
| EAN/UPC - Product/Case | 8720169735194 |
| Numerator - Packs per outer box | 4 |
| EAN/UPC - Case | 8720169735347 |

## Dimensional drawing

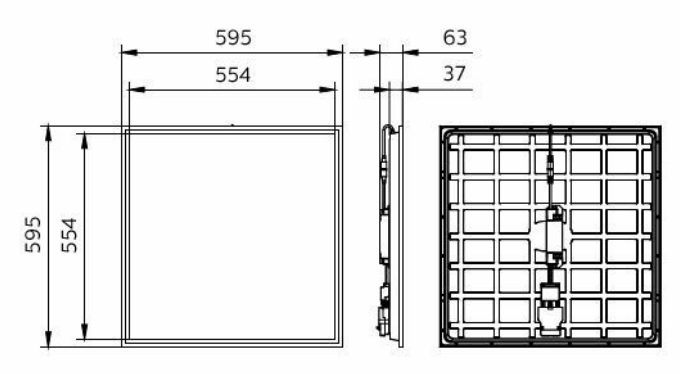


## Polar normal diagrams

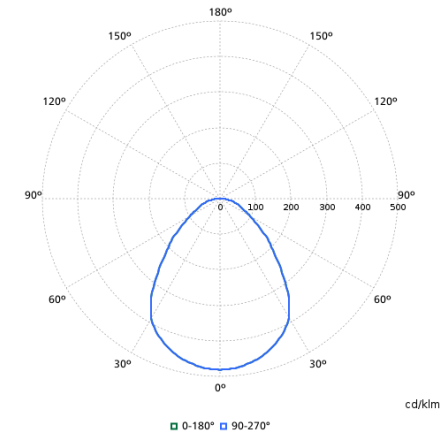


## Compatible Accesories

| Accessory Image | Accessory Code | Accessory Name | Website |
|---|---|---|---|
|  | 911401807787 | RC159Z SMB W60L60 | Product Website |

| Accessory Image | Accessory Code | Accessory Name | Website |
|---|---|---|---|
|  | 911401808087 | RC059Z SMB W60L60 | Product Website |
|  | 911401809187 | RC159Z Safety Cable | Product Website |
|  | 911401809287 | RC159Z Plaster Ceiling SMB-PLC | Product Website |
|  | 911401809387 | RC159Z Suspension set SME-4 WH | Product Website |
| 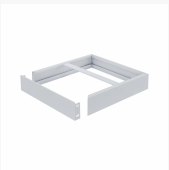 | 911401870988 | RC159Z SMB W60L60 PREF | Product Website |
|  | 911401888587 | RC159Z CPC bracket kit | Product Website |

| Accessory Image | Accessory Code | Accessory Name | Website |
|---|---|---|---|
|  | 912401483525 | RC159Z Deco Square W60L60 (5pcs) | Product Website |
|  | 912401483526 | RC159Z Deco Double Square W60L60 (5pcs) | Product Website |
|  | 912401483527 | RC159Z Deco Double Circle W60L60 (5pcs) | Product Website |

## Related Documents

| Documents and certificates | Document Name | Download |
|---|---|---|
| Installation Instructions | CoreLine-panel-G6-Installation-Instructions-RC132V-All-in.pdf | Download |
| Environmental Product Declaration | EPD-CoreLine-Panel-gen6-RC132V-W60L60-Ref-911401890585.pdf | Download |

| Photometry and lighting design | Document Name | Download |
|---|---|---|
| IES File | rc132v-g6-29-36-43s-830-40-psd-w60l60-oc-911401891285.ies | Download |
| LDT File | rc132v-g6-29-36-43s-830-40-psd-w60l60-oc-911401891285.ldt | Download |
| ROLF File | rc132v-g6-29-36-43s-830-40-psd-w60l60-oc-911401891285.rolfz | Download |
| ULD File | rc132v-g6-29-36-43s-830-40-psd-w60l60-oc-911401891285.uld | Download |
| Revit file | rc132v-g6-29-36-43s-830-40-psd-w60l60-oc-911401891285.zip | Download |

© 2026 Signify Holding. All rights reserved. The information provided herein is subject to change, without notice. Signify does not give any representation or warranty as to the accuracy or completeness of the information included herein and shall not be liable for any action in reliance thereon. The information presented in this document is not intended as any commercial offer and does not form part of any quotation or contract, unless otherwise agreed by Signify. Philips and the Philips Shield Emblem are registered trademarks of Koninklijke Philips N.V.