PHILIPS

SlimBalance Symphony

SP570



Make your indoor place harmonious

SlimBalance Symphony SP570P Curve is a flexible curve offer which fits a variety of spaces like office, meeting room, gym and education. It offers ¼ circle, ½ circle, ¾ circle and full circle as standard offers. In addition to these standard offers, SlimBalance Symphony SP570P Curve provides flexible angle from 22.5 degree to 360 degree. By means of its special designed structure, it offers quick and easy installation and maintenance too.

Benefits

- Flexible solutions to provide desired structures and help perfectly mix the luminaires into environment and create inspired lighting design for indoor spaces
- Max 130lm/w system efficacy for higher energy saving
- Easy installation and maintenance to save on-site operation time

Applications

- Office
- Supermarket
- Retail
- Gym
- Other indoor open ceiling areas

Features

- Ultra flexible curve arc angle and diameter options for customization
- High system efficacy for better energy saving
- Quick and toolless connection between curve and linear for easy maintenance

Versions

SlimBalance Symphony

SlimBalance Symphony

SlimBalance Symphony

SlimBalance Symphony

Dimensional drawing

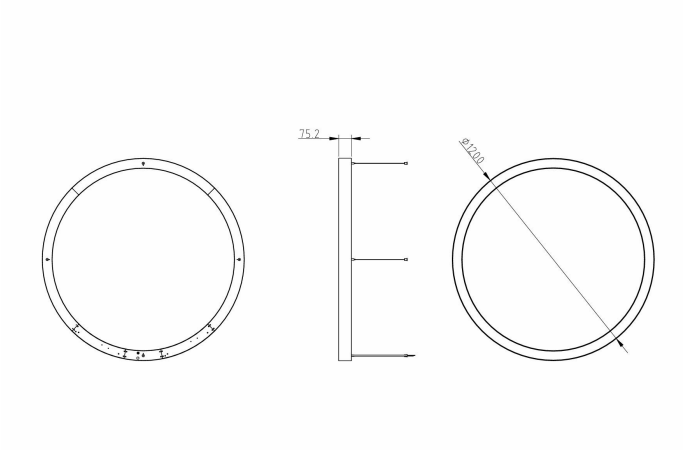

SP570P LED131/840 D120W6 360 SD CRV PSD

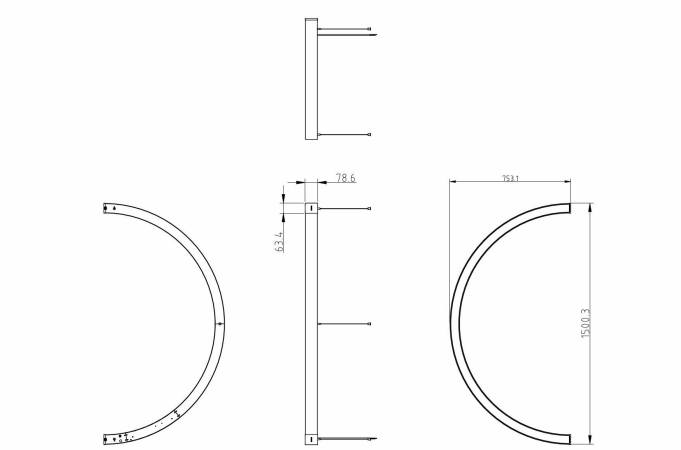

SP570P LED82/840 D150W6 180 SD CRV PSU

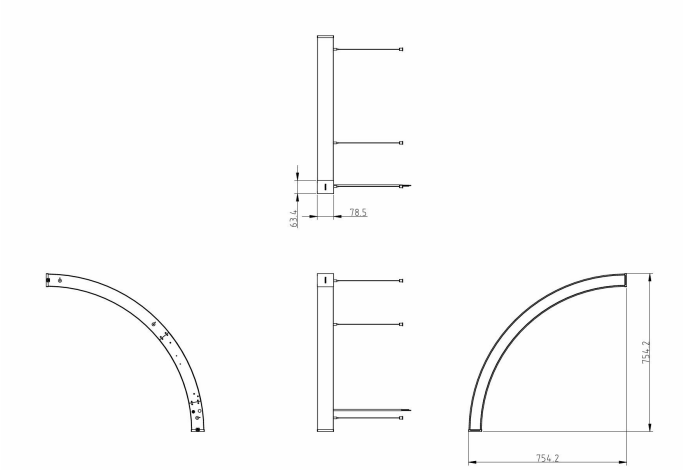

SP570P LED41/840 D150W6 90 SD CRV PSU

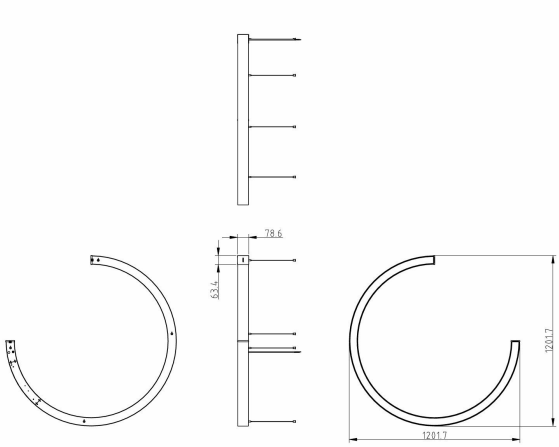

SP570P LED98/840 D120W6 270 SD CRV PSD

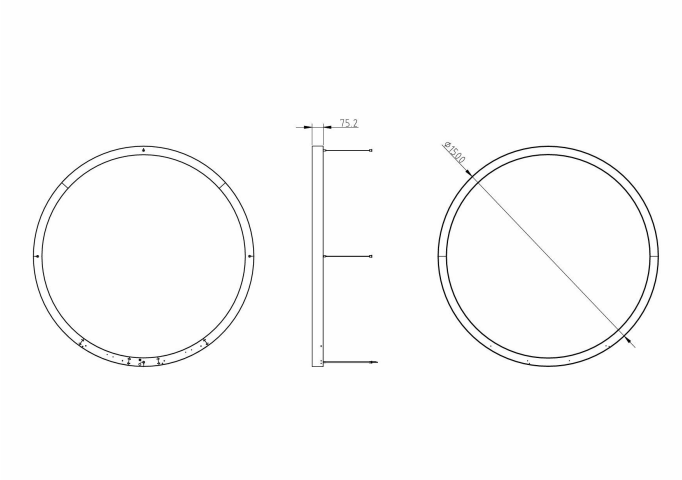

SP570P LED164/840 D150W6 360 SD CRV PSD

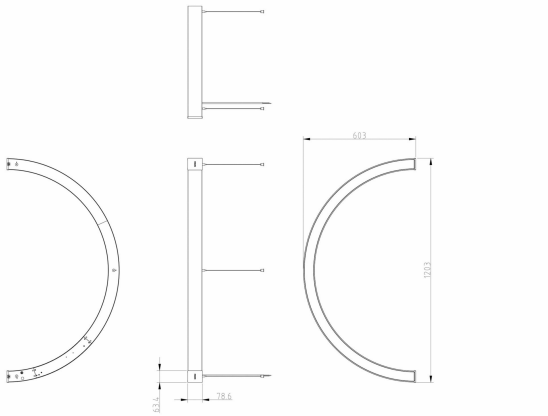

SP570P LED65/840 D120W6 180 SD CRV PSU

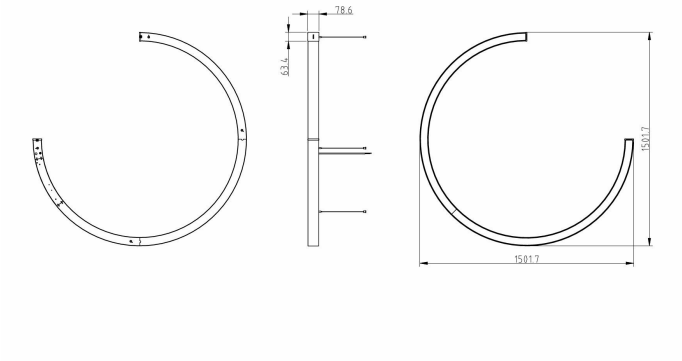

SP570P LED123/840 D150W6 270 SD CRV PSD

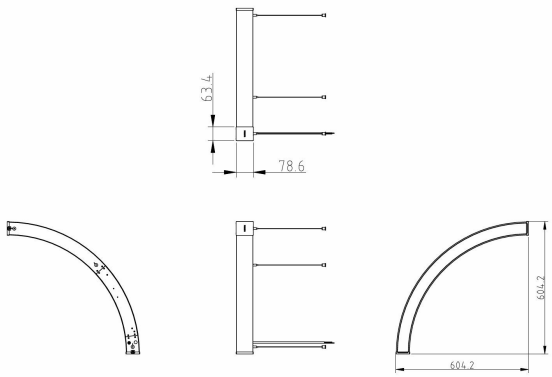

SP570P LED32/840 D120W6 90 SD CRV PSU

General Information

Gear	-
Driver included	Yes

Light Technical

Correlated Color Temperature (Nom)	4000 K
Color rendering index (CRI)	≥80
Beam angle of light source	120 degree(s)
Optic type	Opal

Operating and Electrical

Input Voltage	220-240 V
Line Frequency	50 or 60 Hz
Suitable for random switching	No
Protection class IEC	Safety class I

Mechanical and Housing

Housing Color	White RAL 9006
Ingress protection code	IP20 [Finger-protected]
Mech. impact protection code	IK03 [0.3 J]
Optical cover type	Polycarbonate bowl/cover

Approval and Application

Glow-wire test	Temperature 650 °C, duration 30 s
Flammability mark	-
CE mark	Yes
ENEC mark	-
Ambient temperature range	-20 to +40 °C

Initial Performance (IEC Compliant)

Luminous flux tolerance	+/-10%
Initial chromaticity	SDCM < 4

General Information

Order Code	Full Product Name	Number of gear units
911401557846	SP570P LED32/840 D120W6 90 SD CRV PSU	1 unit
911401558246	SP570P LED41/840 D150W6 90 SD CRV PSU	1 unit
911401558646	SP570P LED32/840 D120W6 90 SD CRV PSD	1 unit
911401559046	SP570P LED41/840 D150W6 90 SD CRV PSD	1 unit
911401557646	SP570P LED98/840 D120W6 270 SD CRV PSU	1 unit
911401558046	SP570P LED123/840 D150W6 270 SD CRV PSU	1 unit
911401558446	SP570P LED98/840 D120W6 270 SD CRV PSD	1 unit
911401558846	SP570P LED123/840 D150W6 270 SD CRV PSD	1 unit
911401557546	SP570P LED131/840 D120W6 360 SD CRV PSU	2 units
911401557946	SP570P LED164/840 D150W6 360 SD CRV PSU	2 units
911401558346	SP570P LED131/840 D120W6 360 SD CRV PSD	2 units
911401558746	SP570P LED164/840 D150W6 360 SD CRV PSD	2 units
911401557746	SP570P LED65/840 D120W6 180 SD CRV PSU	1 unit
911401558146	SP570P LED82/840 D150W6 180 SD CRV PSU	1 unit
911401558546	SP570P LED65/840 D120W6 180 SD CRV PSD	1 unit
911401558946	SP570P LED82/840 D150W6 180 SD CRV PSD	1 unit

Light Technical

Order Code	Full Product Name	Luminous Flux	Luminous Efficacy (rated) (Nom)	Number of light sources
911401557846	SP570P LED32/840 D120W6 90 SD CRV PSU	3,280 lm	136.66666666666666 lm/W	4
911401558246	SP570P LED41/840 D150W6 90 SD CRV PSU	4,110 lm	139.32203389830508 lm/W	4
911401558646	SP570P LED32/840 D120W6 90 SD CRV PSD	3,280 lm	131.2 lm/W	4
911401559046	SP570P LED41/840 D150W6 90 SD CRV PSD	4,110 lm	130.47619047619048 lm/W	4
911401557646	SP570P LED98/840 D120W6 270 SD CRV PSU	9,860 lm	142.8985507246377 lm/W	12
911401558046	SP570P LED123/840 D150W6 270 SD CRV PSU	12,330 lm	144.21052631578948 lm/W	12
911401558446	SP570P LED98/840 D120W6 270 SD CRV PSD	9,860 lm	141.8705035971223 lm/W	12
911401558846	SP570P LED123/840 D150W6 270 SD CRV PSD	12,330 lm	141.72413793103448 lm/W	12
911401557546	SP570P LED131/840 D120W6 360 SD CRV PSU	13,150 lm	136.97916666666666 lm/W	16
911401557946	SP570P LED164/840 D150W6 360 SD CRV PSU	16,440 lm	143.58078602620088 lm/W	16
911401558346	SP570P LED131/840 D120W6 360 SD CRV PSD	13,150 lm	139.15343915343917 lm/W	16
911401558746	SP570P LED164/840 D150W6 360 SD CRV PSD	16,440 lm	139.91489361702128 lm/W	16
911401557746	SP570P LED65/840 D120W6 180 SD CRV PSU	6,570 lm	142.82608695652175 lm/W	8
911401558146	SP570P LED82/840 D150W6 180 SD CRV PSU	8,220 lm	142.95652173913044 lm/W	8
911401558546	SP570P LED65/840 D120W6 180 SD CRV PSD	6,570 lm	138.31578947368422 lm/W	8
911401558946	SP570P LED82/840 D150W6 180 SD CRV PSD	8,220 lm	140.51282051282053 lm/W	8

Operating and Electrical

Order Code	Full Product Name	Power Consumption
911401557846	SP570P LED32/840 D120W6 90 SD CRV PSU	24 W
911401558246	SP570P LED41/840 D150W6 90 SD CRV PSU	29.5 W
911401558646	SP570P LED32/840 D120W6 90 SD CRV PSD	25.5 W
911401559046	SP570P LED41/840 D150W6 90 SD CRV PSD	31.5 W
911401557646	SP570P LED98/840 D120W6 270 SD CRV PSU	69 W
911401558046	SP570P LED123/840 D150W6 270 SD CRV PSU	85.5 W
911401558446	SP570P LED98/840 D120W6 270 SD CRV PSD	69.5 W
911401558846	SP570P LED123/840 D150W6 270 SD CRV PSD	87 W
911401557546	SP570P LED131/840 D120W6 360 SD CRV PSU	96 W
911401557946	SP570P LED164/840 D150W6 360 SD CRV PSU	114.5 W
911401558346	SP570P LED131/840 D120W6 360 SD CRV PSD	94.5 W
911401558746	SP570P LED164/840 D150W6 360 SD CRV PSD	117.5 W
911401557746	SP570P LED65/840 D120W6 180 SD CRV PSU	46 W
911401558146	SP570P LED82/840 D150W6 180 SD CRV PSU	57.5 W
911401558546	SP570P LED65/840 D120W6 180 SD CRV PSD	47.5 W
911401558946	SP570P LED82/840 D150W6 180 SD CRV PSD	58.5 W

Controls and Dimming

Order Code	Full Product Name	Dimmable	Maximum dim level
911401557846	SP570P LED32/840 D120W6 90 SD CRV PSU	Fixed	Not applicable

Order Code	Full Product Name	Dimmable	Maximum dim level
911401558246	SP570P LED41/840 D150W6 90 SD CRV PSU	Fixed	Not applicable
911401558646	SP570P LED32/840 D120W6 90 SD CRV PSD	DALI	1%
911401559046	SP570P LED41/840 D150W6 90 SD CRV PSD	DALI	1%
911401557646	SP570P LED98/840 D120W6 270 SD CRV PSU	Fixed	Not applicable
911401558046	SP570P LED123/840 D150W6 270 SD CRV PSU	Fixed	Not applicable
911401558446	SP570P LED98/840 D120W6 270 SD CRV PSD	DALI	1%
911401558846	SP570P LED123/840 D150W6 270 SD CRV PSD	DALI	1%
911401557546	SP570P LED131/840 D120W6 360 SD CRV PSU	Fixed	Not applicable
911401557946	SP570P LED164/840 D150W6 360 SD CRV PSU	Fixed	Not applicable
911401558346	SP570P LED131/840 D120W6 360 SD CRV PSD	DALI	1%
911401558746	SP570P LED164/840 D150W6 360 SD CRV PSD	DALI	1%
911401557746	SP570P LED65/840 D120W6 180 SD CRV PSU	Fixed	Not applicable
911401558146	SP570P LED82/840 D150W6 180 SD CRV PSU	Fixed	Not applicable
911401558546	SP570P LED65/840 D120W6 180 SD CRV PSD	DALI	1%
911401558946	SP570P LED82/840 D150W6 180 SD CRV PSD	DALI	1%

© 2026 Signify Holding. All rights reserved. The information provided herein is subject to change, without notice. Signify does not give any representation or warranty as to the accuracy or completeness of the information included herein and shall not be liable for any action in reliance thereon. The information presented in this document is not intended as any commercial offer and does not form part of any quotation or contract, unless otherwise agreed by Signify. Philips and the Philips Shield Emblem are registered trademarks of Koninklijke Philips N.V.