PHILIPS

EB-T Electronic ballasts for TL-D lamps (India)

IN_TLDE



EB-T electronic ballasts for TL-D lamps

Compact, lightweight, high-frequency electronic standard ballasts for TL-D 36 W/TL40 lamps

Benefits

- The combination of EB-T ballast and TL-D/TL5 lamps offers a standard professional lighting system that fulfills all international norms
- 25% energy saving compared with standard electromagnetic ballast system
- Protection against excessive mains voltage and incorrect terminal communications (e.g. output short)

Features

- Flicker-free pre-heat (rapid-start) lamp ignition enables the lamps to be switched on and off without reducing useful life
- Offers low mains-current harmonic distortion of <10%
- End-of-life protection
- High power factor of 0.98
- Switching cycle 6500 times

Applications

- Areas with long hours of usage, e.g. industrial premises, airports and railway stations
- Retail and hospitality
- Office buildings and hospitals

Versions



GPPR_INEFLU01_0009-Product photo



GPPR_INEFLU01_0010-Product photo



GPPR INEFLU01 0011

Dimensional drawing

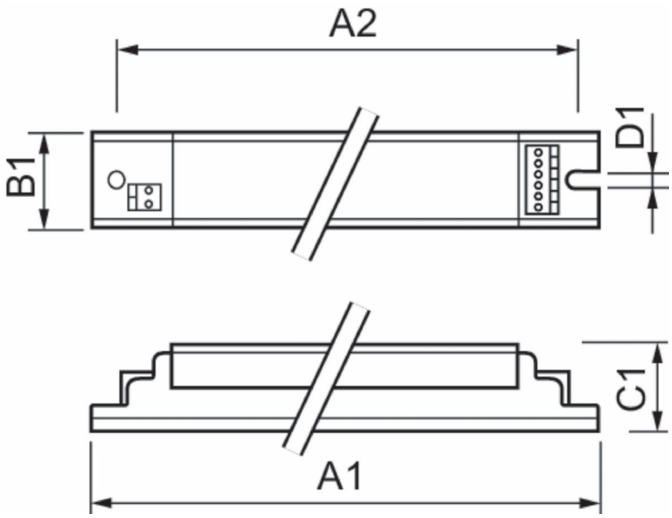

Product	D1	C1	A1	A2	B1
EBT 136 TLD	4.0 mm	30.0 mm	210.0 mm	200.0 mm	40.0 mm
EBT 218 TLD	4.0 mm	30.0 mm	210.0 mm	200.0 mm	40.0 mm
EBT 236 TLD	4.0 mm	30.0 mm	210.0 mm	200.0 mm	40.0 mm

Operating and Electrical

Input Voltage	220 to 240 V
Line Frequency	50 to 60 Hz
Input Frequency	50 to 60 Hz

Approval and Application

Energy Efficiency Index	A3

© 2026 Signify Holding. All rights reserved. The information provided herein is subject to change, without notice. Signify does not give any representation or warranty as to the accuracy or completeness of the information included herein and shall not be liable for any action in reliance thereon. The information presented in this document is not intended as any commercial offer and does not form part of any quotation or contract, unless otherwise agreed by Signify. Philips and the Philips Shield Emblem are registered trademarks of Koninklijke Philips N.V.