PHILIPS

DuraLED Well Glass

7485048



An Energy efficient Well Glass for Industrial and commercial application

DuraLED well glass is designed to replace traditional Well Glass up to 70W with only 50% of the load for similar illumination. It is a perfect LED solution for outdoor application and industry of harsh condition like power plant, metal, and non-hazardous area in chemical and petrochemical industry. Compared to conventional HID Well Glass, it improves reliability, comfort, while reducing energy and maintenance cost dramatically. DuraLED Well Glass comes with 2 different mounting, Wall bracket (2 types) & Eye-bolt and comes with 2 color temperature and 2 lumen outputs.

Benefits

- Suitable for use in harsh Industrial environment
- Outstanding energy efficiency leads to lowering ROI
- Comfortable diffused light
- High quality material and design leads to longer life class for luminaire

Applications

- Manufacturing
- Harsh Industry Applications

Features

- Ingress Protection -IP65
- Impact Resistance IK08
- Inbuilt encapsulated Potted Driver
- Designed for operations under diverse environment from 0˚C to 45˚C
- Life class is 50000 hours (L70B50 @ Ta45˚C)
- Pressure die-cast housing offers excellent corrosion-resistance and robustness
- System efficiency >120 lm/W
- High Voltage Cutoff @ 325 ± 15V with Auto Restart feature
- 440V Protection for 8 Hrs. (Phase to Phase)

- Internal Surge Protection 4KV
- CRI>80; comfortable lighting with low glare ratings
- Meant for use in Indoor Industrial environment only

Versions



BY300P LED

Dimensional drawing

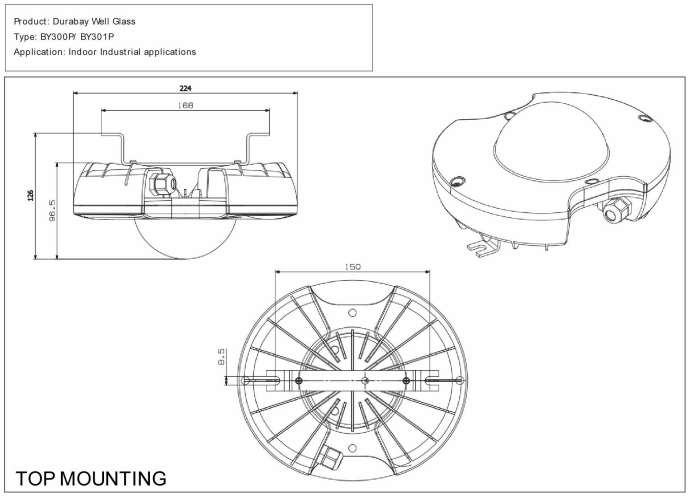

BY300P LED

Product details



BY300P LED



BY300P LED



BY300P LED

General Information

Driver included	Yes

Light Technical

Luminous Efficacy (rated) (Nom)	120 lm/W
Color rendering index (CRI)	>80
Beam angle of light source	120 degree(s)
Optic type	Beam angle 120°

Operating and Electrical

Input Voltage	120 to 277 V
Protection class IEC	Safety class I

Controls and Dimming

Dimmable	No

Mechanical and Housing

Housing Color	Gray
Ingress protection code	IP65 [Dust penetration-protected, jet-proof]
Mech. impact protection code	IK08 [5 J vandal-protected]
Optical cover type	Opal diffuser in polycarbonate cover

Approval and Application

Flammability mark	For mounting on normally flammable surfaces
Ambient temperature range	0 to +45 °C

Initial Performance (IEC Compliant)

Initial chromaticity	SDCM<5

Light Technical

Order Code	Full Product Name	Luminous Flux	Correlated Color Temperature (Nom)
919515812315	BY300P LED 25S WW PSU S1 PC	2,700 lm	3000 K
919515812317	BY300P LED 27S CW PSU S1 PC	2,700 lm	6500 K
919515812324	BY300P LED 35S WW PSU S1 PC	3,700 lm	3000 K
919515812325	BY300P LED 37S NW PSU S1 PC	3,700 lm	4000 K
919515812326	BY300P LED 37S CW PSU S1 PC	3,700 lm	6500 K
919515812332	BY300P LED 37S CW PSU S1 PC SPD	3,700 lm	6500 K

Operating and Electrical

Order Code	Full Product Name	Power Consumption
919515812315	BY300P LED 25S WW PSU S1 PC	23 W
919515812317	BY300P LED 27S CW PSU S1 PC	23 W
919515812324	BY300P LED 35S WW PSU S1 PC	33 W
919515812325	BY300P LED 37S NW PSU S1 PC	33 W
919515812326	BY300P LED 37S CW PSU S1 PC	33 W
919515812332	BY300P LED 37S CW PSU S1 PC SPD	33 W

© 2026 Signify Holding. All rights reserved. The information provided herein is subject to change, without notice. Signify does not give any representation or warranty as to the accuracy or completeness of the information included herein and shall not be liable for any action in reliance thereon. The information presented in this document is not intended as any commercial offer and does not form part of any quotation or contract, unless otherwise agreed by Signify. Philips and the Philips Shield Emblem are registered trademarks of Koninklijke Philips N.V.