PHILIPS

SmartBright Road

BRP13X



Sleek, reliable and cost-efficient LED lighting

The SmartBright road is ideal for new streets and for renovating existing installations, this affordable range of lighting solutions combines clean, high-quality light with significant energy savings and reduced maintenance.

Benefits

- Perfect for one to one replacement of conventional SON or HPL luminaires.
- Offer initial investment with good-quality and energy-efficient lighting.
- Fit wide application areas and suitable to use for residential street, main road and parking area

Applications

- Road and Residential street
- Parking area
- Walking/cycling path

Features

- One to one replacement for 100W, 150W and 250W conventional SON or HPL luminaires
- Reliable design with diecast aluminum housing
- Fully IP66 Ingress and IK08 mechanical impacts protection
- 10kV/Ka replaceable surge protection device
- 30,000 hours L70 at 35C Ta rated lifetime
- 130lm/w luminous efficacy
- Operating temperature range - 40ºC < Ta < 50ºC
- Optimized optic for road and street lighting

Versions



SmartBright Road BRP130



SmartBright Road



SmartBright Road



SmartBright Road

Dimensional drawing

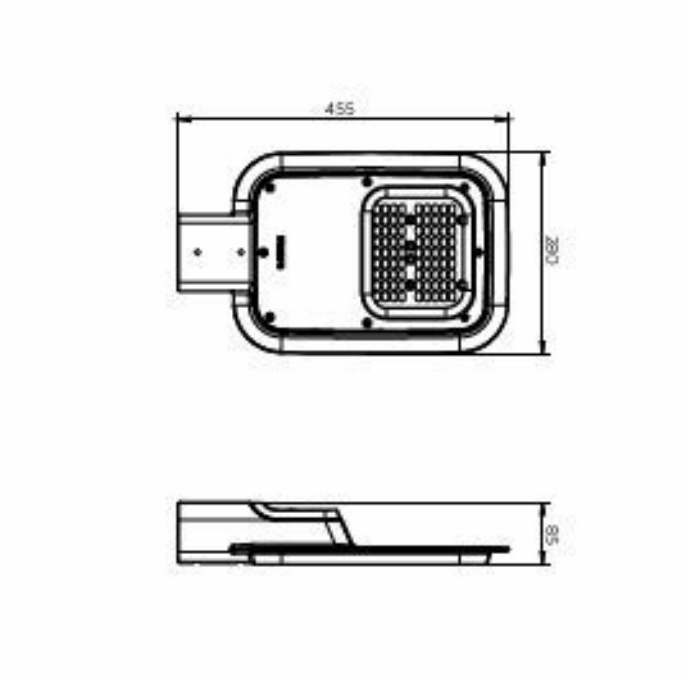

BRP131 LED125/NW 100W 220-240V DM GM

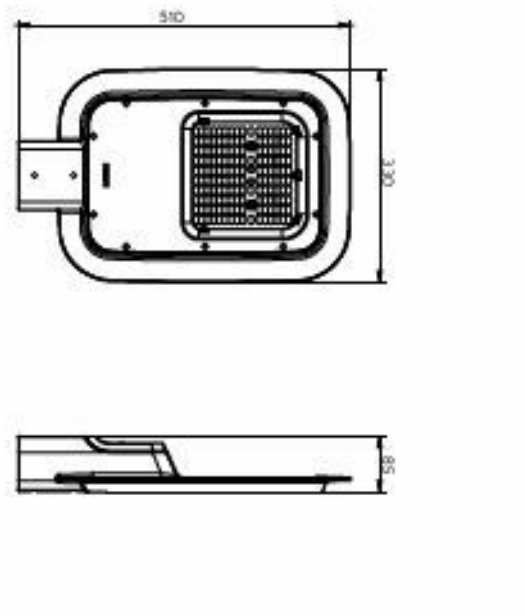

BRP132 LED175/NW 140W 220-240V DM GM

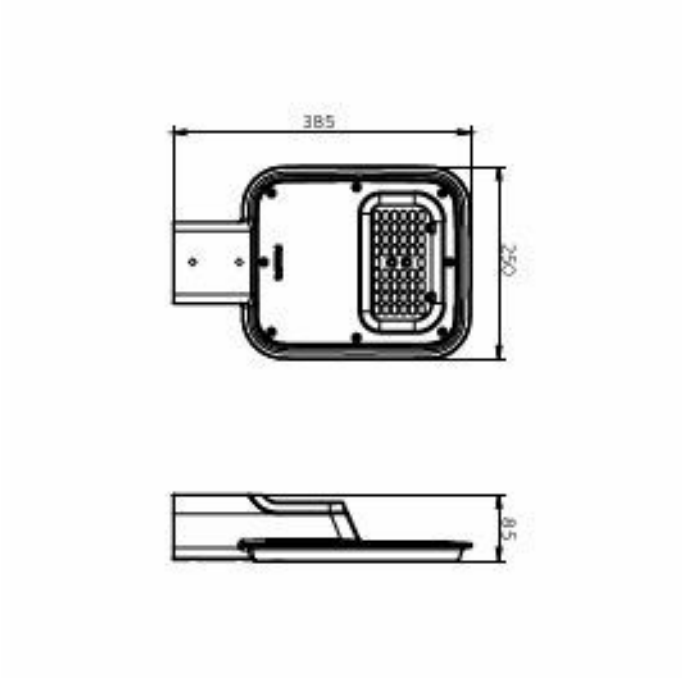

BRP130 LED88/NW 70W 220-240V DM GM

Product details



BRP13 front

General Information

Driver included	Yes
Service tag	Yes

Light Technical

Color rendering index (CRI)	>70

Controls and Dimming

Dimmable	No

Mechanical and Housing

Housing Color	Gray
Ingress protection code	IP66 [Dust penetration-protected, jet-proof]
Mech. impact protection code	IK08 [5 J vandal-protected]
Optical cover type	Transparent bowl with transparent cover

Approval and Application

Flammability mark	For mounting on normally flammable surfaces
CE mark	Yes

Light Technical

Order Code	Full Product Name	Luminous Flux	Correlated Color Temperature (Nom)	Light source color
911401625112	BRP130 LED88/NW 70W 220-240V DM GM	8,800 lm	4000 K	Neutral white
911401625512	BRP130 LED88/WW 70W 220-240V DM GM	8,800 lm	3000 K	Warm white
911401625812	BRP130 LED88/CW 70W 220-240V DM GM	8,800 lm	5700 K	Cool white
911401675608	BRP130 LED88/WW 70W 220-240V DM GM	8,800 lm	3000 K	Warm white
911401675708	BRP130 LED88/NW 70W 220-240V DM GM	8,800 lm	4000 K	Neutral white
911401675808	BRP130 LED88/CW 70W 220-240V DM GM	8,800 lm	5700 K	Cool white
911401625012	BRP132 LED175/CW 140W 220-240V DM GM	17,500 lm	5700 K	Cool white
911401625212	BRP132 LED175/WW 140W 220-240V DM GM	17,500 lm	3000 K	Warm white
911401625712	BRP132 LED175/NW 140W 220-240V DM GM	17,500 lm	4000 K	Neutral white
911401676208	BRP132 LED175/WW 140W 220-240V DM GM	17,500 lm	3000 K	Warm white
911401676308	BRP132 LED175/NW 140W 220-240V DM GM	17,500 lm	4000 K	Neutral white
911401676408	BRP132 LED175/CW 140W 220-240V DM GM	17,500 lm	5700 K	Cool white
911401676507	BRP132 LED175/WW 140W 220-240V DM GM	17,500 lm	3000 K	Warm white
911401676607	BRP132 LED175/NW 140W 220-240V DM GM	17,500 lm	4000 K	Neutral white
911401676707	BRP132 LED175/CW 140W 220-240V DM GM	17,500 lm	5700 K	Cool white
911401692407	BRP132 LED175/WW 140W 220-240V DM ANZ	17,500 lm	3000 K	Warm white
911401692507	BRP132 LED175/NW 140W 220-240V DM ANZ	17,500 lm	4000 K	Neutral white
911401625312	BRP131 LED125/WW 100W 220-240V DM GM	12,500 lm	3000 K	Warm white
911401625412	BRP131 LED125/NW 100W 220-240V DM GM	12,500 lm	4000 K	Neutral white
911401625612	BRP131 LED125/CW 100W 220-240V DM GM	12,500 lm	5700 K	Cool white
911401675908	BRP131 LED125/WW 100W 220-240V DM GM	12,500 lm	3000 K	Warm white
911401676008	BRP131 LED125/NW 100W 220-240V DM GM	12,500 lm	4000 K	Neutral white
911401676108	BRP131 LED125/CW 100W 220-240V DM GM	12,500 lm	5700 K	Cool white
911401676207	BRP131 LED125/WW 100W 220-240V DM GM	12,500 lm	3000 K	Warm white
911401676307	BRP131 LED125/NW 100W 220-240V DM GM	12,500 lm	4000 K	Neutral white
911401676407	BRP131 LED125/CW 100W 220-240V DM GM	12,500 lm	5700 K	Cool white
911401692207	BRP131 LED125/NW 100W 220-240V DM ANZ	12,500 lm	4000 K	Neutral white

Order Code	Full Product Name	Luminous Flux	Correlated Color Temperature (Nom)	Light source color
911401675907	BRP130 LED88/WW 70W 220-240V DM GM	8,800 lm	3000 K	Warm white
911401676007	BRP130 LED88/NW 70W 220-240V DM GM	8,800 lm	4000 K	Neutral white
911401676107	BRP130 LED88/CW 70W 220-240V DM GM	8,800 lm	5700 K	Cool white
911401691807	BRP130 LED88/WW 70W 220-240V DM ANZ	8,800 lm	3000 K	Warm white
911401691907	BRP130 LED88/NW 70W 220-240V DM ANZ	8,800 lm	4000 K	Neutral white

Operating and Electrical

Order Code	Full Product Name	Power Consumption
911401625112	BRP130 LED88/NW 70W 220-240V DM GM	70 W
911401625512	BRP130 LED88/WW 70W 220-240V DM GM	70 W
911401625812	BRP130 LED88/CW 70W 220-240V DM GM	70 W
911401675608	BRP130 LED88/WW 70W 220-240V DM GM	70 W
911401675708	BRP130 LED88/NW 70W 220-240V DM GM	70 W
911401675808	BRP130 LED88/CW 70W 220-240V DM GM	70 W
911401625012	BRP132 LED175/CW 140W 220-240V DM GM	140 W
911401625212	BRP132 LED175/WW 140W 220-240V DM GM	140 W
911401625712	BRP132 LED175/NW 140W 220-240V DM GM	140 W
911401676208	BRP132 LED175/WW 140W 220-240V DM GM	140 W
911401676308	BRP132 LED175/NW 140W 220-240V DM GM	140 W
911401676408	BRP132 LED175/CW 140W 220-240V DM GM	140 W
911401676507	BRP132 LED175/WW 140W 220-240V DM GM	140 W
911401676607	BRP132 LED175/NW 140W 220-240V DM GM	140 W
911401676707	BRP132 LED175/CW 140W 220-240V DM GM	140 W
911401692407	BRP132 LED175/WW 140W 220-240V DM ANZ	140 W
911401692507	BRP132 LED175/NW 140W 220-240V DM ANZ	140 W
911401625312	BRP131 LED125/WW 100W 220-240V DM GM	100 W
911401625412	BRP131 LED125/NW 100W 220-240V DM GM	100 W
911401625612	BRP131 LED125/CW 100W 220-240V DM GM	100 W
911401675908	BRP131 LED125/WW 100W 220-240V DM GM	100 W
911401676008	BRP131 LED125/NW 100W 220-240V DM GM	100 W
911401676108	BRP131 LED125/CW 100W 220-240V DM GM	100 W
911401676207	BRP131 LED125/WW 100W 220-240V DM GM	100 W
911401676307	BRP131 LED125/NW 100W 220-240V DM GM	100 W
911401676407	BRP131 LED125/CW 100W 220-240V DM GM	100 W
911401692207	BRP131 LED125/NW 100W 220-240V DM ANZ	100 W
911401675907	BRP130 LED88/WW 70W 220-240V DM GM	70 W
911401676007	BRP130 LED88/NW 70W 220-240V DM GM	70 W
911401676107	BRP130 LED88/CW 70W 220-240V DM GM	70 W
911401691807	BRP130 LED88/WW 70W 220-240V DM ANZ	70 W
911401691907	BRP130 LED88/NW 70W 220-240V DM ANZ	70 W

© 2026 Signify Holding. All rights reserved. The information provided herein is subject to change, without notice. Signify does not give any representation or warranty as to the accuracy or completeness of the information included herein and shall not be liable for any action in reliance thereon. The information presented in this document is not intended as any commercial offer and does not form part of any quotation or contract, unless otherwise agreed by Signify. Philips and the Philips Shield Emblem are registered trademarks of Koninklijke Philips N.V.