PHILIPS

RS078B P11 930 PSU MB D75 G-BK WH

911401816189



GreenUp Spotlight, 11 W, 930 warm white, IP20 | Finger-protected

GreenUp Spotlight combines good-enough performance with a compact footprint, featuring a shallow luminaire height of just 62mm - 85mm. Its deep recessed structure ensures improved visual comfort , while the 0-25° tiltable feature allows for flexible directional lighting. Built with a robust die-cast housing and front ring for lasting durability, this series offers a wide range of options to widely suit your indoor lighting projects.

General Information

Light source engine type	LED
Warranty period	3 years

Light Technical

Luminous Flux	880 lm
Correlated Color Temperature (Nom)	3000 K
Luminous Efficacy (rated) (Nom)	80 lm/W
Color rendering index (CRI)	≥90
Light source color	930 warm white
Unified glare rating CEN	Not applicable

Operating and Electrical

Input Voltage	220 to 240 V
Line Frequency	50 or 60 Hz
Inrush current	9.44 A
Power Consumption	11 W
Power Factor (Fraction)	0.5
Number of products on MCB of 16 A type B	190
Protection class IEC	Safety class II

Controls and Dimming

Dimmable	No
Control interface	-

Mechanical and Housing

Housing Material	Aluminum die-cast
Optical cover material	Polycarbonate
Housing Color	White
Optical cover finish	Structured optic
Overall height	70 mm
Overall diameter	85 mm
Ingress protection code	IP20 [Finger-protected]
Mech. impact protection code	IK03 [0.3 J]
Optical cover type	Lens
Net Weight (Piece)	0.180 kg

Approval and Application

Flammability mark	For mounting on normally flammable surfaces
CE mark	No
Ambient temperature range	-20 to +40 °C

Initial Performance (IEC Compliant)

Luminous flux tolerance	-10% / +10%
Initial chromaticity	(0.44,0.41) SDCM≤5
Power consumption tolerance	+/-10%

Product Data

Order product name	RS078B P11 930 PSU MB D75 G-BK WH
Full product name	RS078B P11 930 PSU MB D75 G-BK WH
Full product code	872110371630999
Order code	911401816189
Material Nr. (12NC)	911401816189
Numerator - Quantity Per Pack	1
EAN/UPC - Product/Case	8721103716309
Numerator - Packs per outer box	30
EAN/UPC - Case	8721103716781

Dimensional drawing

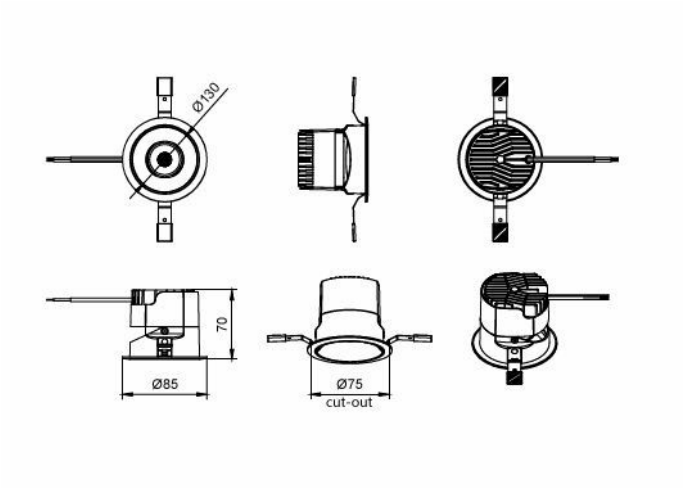

Related Documents

Documents and certificates	Document Name	Download
Installation Instructions	GreenUp-Spotlight-RS078B-MI.pdf	Download

Photometry and lighting design	Document Name	Download
IES File	RS078B-P11-930-PSU-MB-D75-G-BK-WH.ies	Download

© 2026 Signify Holding. All rights reserved. The information provided herein is subject to change, without notice. Signify does not give any representation or warranty as to the accuracy or completeness of the information included herein and shall not be liable for any action in reliance thereon. The information presented in this document is not intended as any commercial offer and does not form part of any quotation or contract, unless otherwise agreed by Signify. Philips and the Philips Shield Emblem are registered trademarks of Koninklijke Philips N.V.