PHILIPS

Essential Smartbright LED Batten

BN068C



An Easier Way to More Savings

Whether for a new building or renovation of an existing space, customers want lighting solutions that provide quality of light and substantial energy and maintenance savings. This new batten range of LED products can be used to replace traditional battens with fluorescent lamps. The process of selecting, installing and maintaining is so easy – it's a simple switch

Benefits

- Slim and trunkable, integrated design
- To replace T5 Essential Batten TCH086/084
- Polycarbonate housing with one pc extrusion process
- Semi-transparent endcap eliminates the black spot entirely in trunking
- Different type can mix and match, flexible in a long length
- Sockets and accessories compatible with BN066C & TCH086 EV

Applications

- Indirect lighting: Shelf, cove, back light box, ambient
- Direct lighting: Convenient store, Long distance linear lighting

Features

- One piece PC extrusion housing, Single piece integral design for better aesthetics
- Transparent end cap, Enables continuous light line without black spots up to 10pcs
- CRI 80, SDCM < 7, 80lm/W, Superior light quality combined with good energy savings
- Slim profile, Ideal for task lighting / cove lighting applications
- Slim and narrow end cap, Fits the cove or shelf more easily
- Uniform Light, Optimal optical design to ensure no spottiness
- L70 20k hours, Reliable long lasting solution
- 4 lengths, 3 colors, Increased number of options for easy application

Versions



Essential SmartBright BN017C



Essential SmartBright LED batten G2 BN068C



Essential SmartBright BN017C



Essential SmartBright BN017C

Dimensional drawing

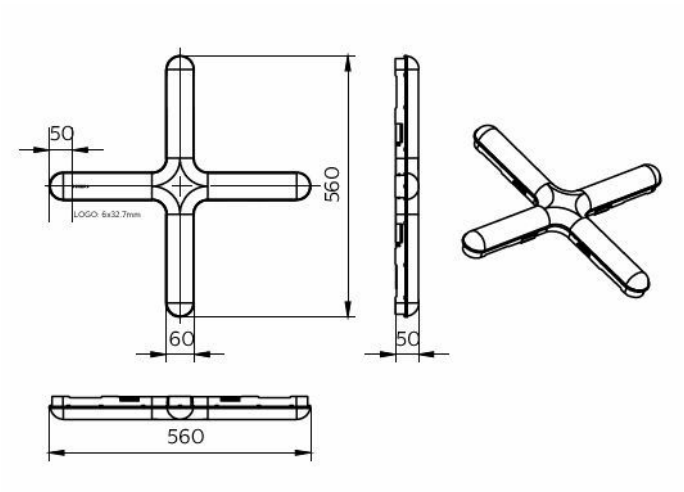

BN017C LED60/840 X 2ft

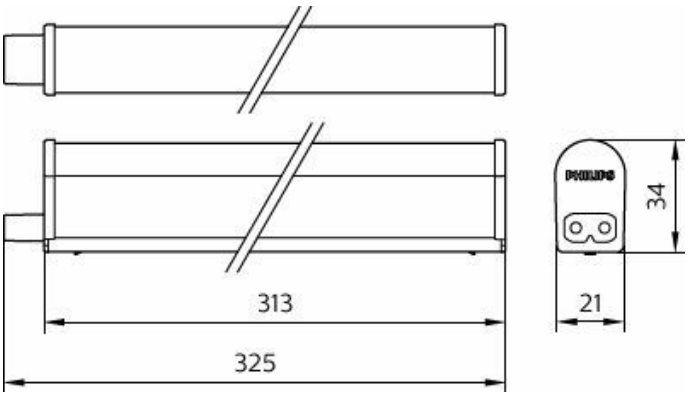

BN068C LED3 L300 G2

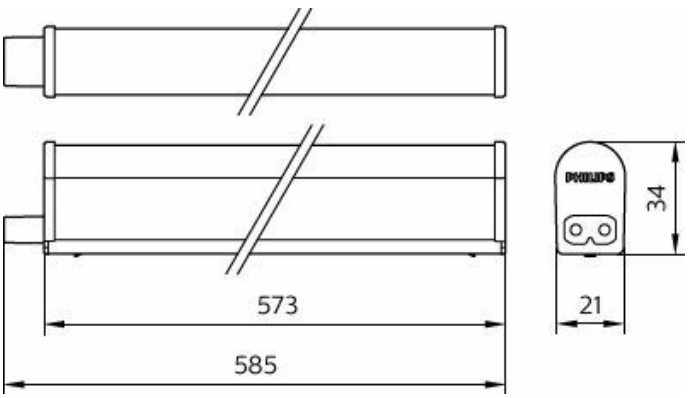

BN068C LED6 L600 G2

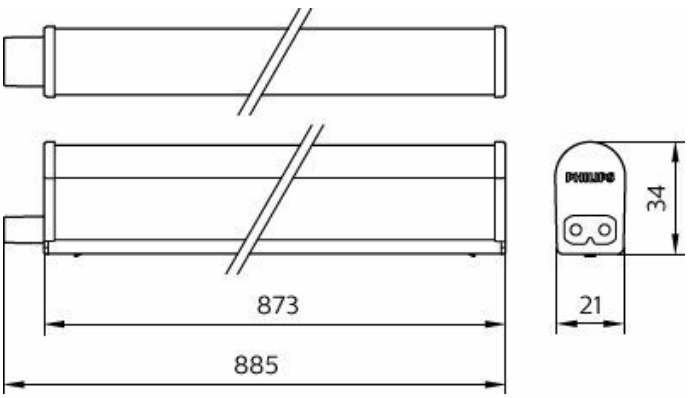

BN068C LED9 L900 G2

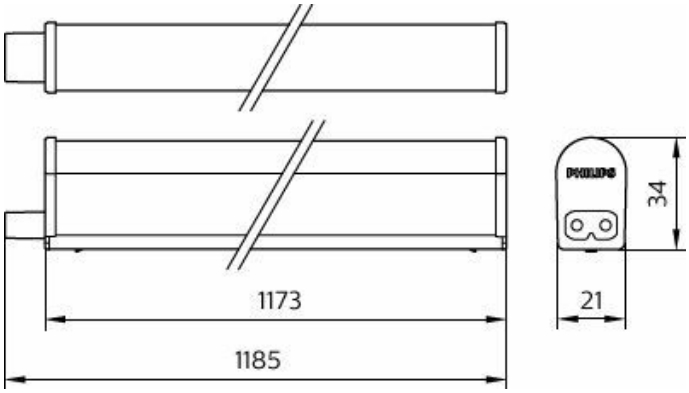

BN068C LED12 L1200 G2



BN017C LED30/840 2ft

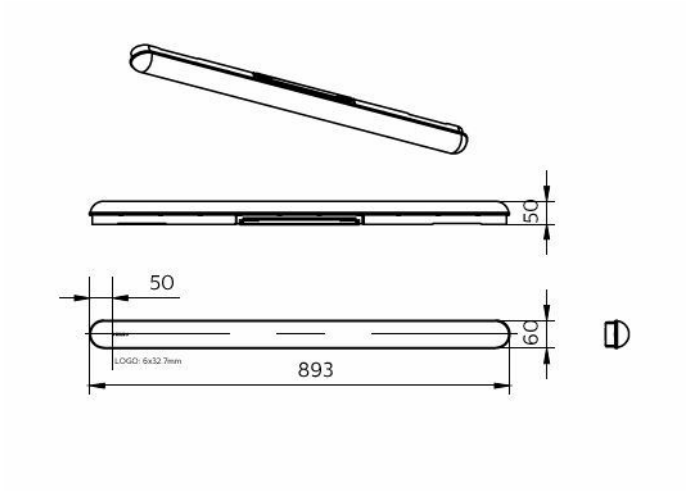

BN017C LED50/857 3ft

Product details



Essential SmartBright BN017C



Essential SmartBright BN017C



Essential SmartBright BN017C

General Information

Light source replaceable	No
Number of gear units	1 unit
Gear	-
Driver included	Yes

Light Technical

Number of light sources	1
Beam angle of light source	110 degree(s)
Optic type	Wide beam

Operating and Electrical

Suitable for random switching	Not applicable
Protection class IEC	Safety class II

Controls and Dimming

Maximum dim level	Not applicable

Mechanical and Housing

Housing Color	White
Ingress protection code	IP20 [Finger-protected]

Approval and Application

Flammability mark	For mounting on normally flammable surfaces
CE mark	No
ENEC mark	-
Ambient temperature range	-20 to +40 °C

Initial Performance (IEC Compliant)

Luminous flux tolerance	+/-10%

Light Technical

Order Code	Full Product Name	Luminous Flux	Correlated Color Temperature (Nom)	Luminous Efficacy (rated) (Nom)	Color rendering index (CRI)
911401805987	BN017C LED30/840 2ft	3,000 lm	4000 K	100 lm/W	80
911401806087	BN017C LED30/857 2ft	3,000 lm	5700 K	100 lm/W	80
911401818497	BN068C LED3/CW L300 G2	300 lm	6500 K	88 lm/W	>80
911401818597	BN068C LED3/NW L300 G2	300 lm	4000 K	88 lm/W	>80
911401818697	BN068C LED3/WW L300 G2	300 lm	3000 K	88 lm/W	>80
911401818797	BN068C LED6/CW L600 G2	600 lm	6500 K	92 lm/W	>80
911401818897	BN068C LED6/NW L600 G2	600 lm	4000 K	92 lm/W	>80
911401818997	BN068C LED6/WW L600 G2	600 lm	3000 K	92 lm/W	>80
911401819097	BN068C LED9/CW L900 G2	900 lm	6500 K	94 lm/W	>80
911401819197	BN068C LED9/NW L900 G2	900 lm	4000 K	94 lm/W	>80
911401819297	BN068C LED9/WW L900 G2	900 lm	3000 K	94 lm/W	>80

Order Code	Full Product Name	Luminous Flux	Correlated Color Temperature (Nom)	Luminous Efficacy (rated) (Nom)	Color rendering index (CRI)
911401819397	BN068C LED12/CW L1200 G2	1,200 lm	6500 K	92 lm/W	>80
911401819497	BN068C LED12/NW L1200 G2	1,200 lm	4000 K	92 lm/W	>80
911401819597	BN068C LED12/WW L1200 G2	1,200 lm	3000 K	92 lm/W	>80
911401820297	BN068C LED3/CW L300 TH G2	300 lm	6500 K	88 lm/W	>80
911401820497	BN068C LED3/WW L300 TH G2	300 lm	3000 K	88 lm/W	>80
911401820597	BN068C LED6/CW L600 TH G2	600 lm	6500 K	92 lm/W	>80
911401820697	BN068C LED6/NW L600 TH G2	600 lm	4000 K	92 lm/W	>80
911401820797	BN068C LED6/WW L600 TH G2	600 lm	3000 K	92 lm/W	>80
911401820897	BN068C LED9/CW L900 TH G2	900 lm	6500 K	94 lm/W	>80
911401820997	BN068C LED9/NW L900 TH G2	900 lm	4000 K	94 lm/W	>80
911401821097	BN068C LED9/WW L900 TH G2	900 lm	3000 K	94 lm/W	>80
911401821197	BN068C LED12/CW L1200 TH G2	1,200 lm	6500 K	92 lm/W	>80
911401821297	BN068C LED12/NW L1200 TH G2	1,200 lm	4000 K	92 lm/W	>80
911401821397	BN068C LED12/WW L1200 TH G2	1,200 lm	3000 K	92 lm/W	>80
911401806387	BN017C LED50/840 3ft	5,000 lm	4000 K	100 lm/W	80
911401806487	BN017C LED50/857 3ft	5,000 lm	5700 K	100 lm/W	80
911401806187	BN017C LED60/840 X 2ft	6,000 lm	4000 K	100 lm/W	80
911401806287	BN017C LED60/857 X 2ft	6,000 lm	5700 K	100 lm/W	80

Operating and Electrical

Order Code	Full Product Name	Input Voltage	Line Frequency	Power Consumption
911401805987	BN017C LED30/840 2ft	220 V	60 Hz	30 W
911401806087	BN017C LED30/857 2ft	220 V	60 Hz	30 W
911401818497	BN068C LED3/CW L300 G2	220 to 240 V	50 to 60 Hz	3.4 W
911401818597	BN068C LED3/NW L300 G2	220 to 240 V	50 to 60 Hz	3.4 W
911401818697	BN068C LED3/WW L300 G2	220 to 240 V	50 to 60 Hz	3.4 W
911401818797	BN068C LED6/CW L600 G2	220 to 240 V	50 to 60 Hz	6.5 W
911401818897	BN068C LED6/NW L600 G2	220 to 240 V	50 to 60 Hz	6.5 W
911401818997	BN068C LED6/WW L600 G2	220 to 240 V	50 to 60 Hz	6.5 W
911401819097	BN068C LED9/CW L900 G2	220 to 240 V	50 to 60 Hz	9.6 W
911401819197	BN068C LED9/NW L900 G2	220 to 240 V	50 to 60 Hz	9.6 W
911401819297	BN068C LED9/WW L900 G2	220 to 240 V	50 to 60 Hz	9.6 W
911401819397	BN068C LED12/CW L1200 G2	220 to 240 V	50 to 60 Hz	13 W
911401819497	BN068C LED12/NW L1200 G2	220 to 240 V	50 to 60 Hz	13 W
911401819597	BN068C LED12/WW L1200 G2	220 to 240 V	50 to 60 Hz	13 W
911401820297	BN068C LED3/CW L300 TH G2	220 to 240 V	50 to 60 Hz	3.4 W
911401820497	BN068C LED3/WW L300 TH G2	220 to 240 V	50 to 60 Hz	3.4 W
911401820597	BN068C LED6/CW L600 TH G2	220 to 240 V	50 to 60 Hz	6.5 W
911401820697	BN068C LED6/NW L600 TH G2	220 to 240 V	50 to 60 Hz	6.5 W
911401820797	BN068C LED6/WW L600 TH G2	220 to 240 V	50 to 60 Hz	6.5 W

Order Code	Full Product Name	Input Voltage	Line Frequency	Power Consumption
911401820897	BN068C LED9/CW L900 TH G2	220 to 240 V	50 to 60 Hz	9.6 W
911401820997	BN068C LED9/NW L900 TH G2	220 to 240 V	50 to 60 Hz	9.6 W
911401821097	BN068C LED9/WW L900 TH G2	220 to 240 V	50 to 60 Hz	9.6 W
911401821197	BN068C LED12/CW L1200 TH G2	220 to 240 V	50 to 60 Hz	13 W
911401821297	BN068C LED12/NW L1200 TH G2	220 to 240 V	50 to 60 Hz	13 W
911401821397	BN068C LED12/WW L1200 TH G2	220 to 240 V	50 to 60 Hz	13 W
911401806387	BN017C LED50/840 3ft	220 V	60 Hz	50 W
911401806487	BN017C LED50/857 3ft	220 V	60 Hz	50 W
911401806187	BN017C LED60/840 X 2ft	220 V	60 Hz	60 W
911401806287	BN017C LED60/857 X 2ft	220 V	60 Hz	60 W

Controls and Dimming

Order Code	Full Product Name	Dimmable
911401805987	BN017C LED30/840 2ft	-
911401806087	BN017C LED30/857 2ft	-
911401818497	BN068C LED3/CW L300 G2	No
911401818597	BN068C LED3/NW L300 G2	No
911401818697	BN068C LED3/WW L300 G2	No
911401818797	BN068C LED6/CW L600 G2	No
911401818897	BN068C LED6/NW L600 G2	No
911401818997	BN068C LED6/WW L600 G2	No
911401819097	BN068C LED9/CW L900 G2	No
911401819197	BN068C LED9/NW L900 G2	No
911401819297	BN068C LED9/WW L900 G2	No
911401819397	BN068C LED12/CW L1200 G2	No
911401819497	BN068C LED12/NW L1200 G2	No
911401819597	BN068C LED12/WW L1200 G2	No
911401820297	BN068C LED3/CW L300 TH G2	No
911401820497	BN068C LED3/WW L300 TH G2	No
911401820597	BN068C LED6/CW L600 TH G2	No
911401820697	BN068C LED6/NW L600 TH G2	No
911401820797	BN068C LED6/WW L600 TH G2	No
911401820897	BN068C LED9/CW L900 TH G2	No
911401820997	BN068C LED9/NW L900 TH G2	No
911401821097	BN068C LED9/WW L900 TH G2	No
911401821197	BN068C LED12/CW L1200 TH G2	No
911401821297	BN068C LED12/NW L1200 TH G2	No
911401821397	BN068C LED12/WW L1200 TH G2	No
911401806387	BN017C LED50/840 3ft	-
911401806487	BN017C LED50/857 3ft	-
911401806187	BN017C LED60/840 X 2ft	-
911401806287	BN017C LED60/857 X 2ft	-

Mechanical and Housing

Order Code	Full Product Name	Mech. impact protection code	Optical cover type
911401805987	BN017C LED30/840 2ft	IK03	Opal
911401806087	BN017C LED30/857 2ft	IK03	Opal
911401818497	BN068C LED3/CW L300 G2	IK00	Polycarbonate linear
911401818597	BN068C LED3/NW L300 G2	IK00	Polycarbonate linear
911401818697	BN068C LED3/WW L300 G2	IK00	Polycarbonate linear
911401818797	BN068C LED6/CW L600 G2	IK00	Polycarbonate linear
911401818897	BN068C LED6/NW L600 G2	IK00	Polycarbonate linear
911401818997	BN068C LED6/WW L600 G2	IK00	Polycarbonate linear
911401819097	BN068C LED9/CW L900 G2	IK00	Polycarbonate linear
911401819197	BN068C LED9/NW L900 G2	IK00	Polycarbonate linear
911401819297	BN068C LED9/WW L900 G2	IK00	Polycarbonate linear
911401819397	BN068C LED12/CW L1200 G2	IK00	Polycarbonate linear
911401819497	BN068C LED12/NW L1200 G2	IK00	Polycarbonate linear
911401819597	BN068C LED12/WW L1200 G2	IK00	Polycarbonate linear
911401820297	BN068C LED3/CW L300 TH G2	IK00	Polycarbonate linear
911401820497	BN068C LED3/WW L300 TH G2	IK00	Polycarbonate linear
911401820597	BN068C LED6/CW L600 TH G2	IK00	Polycarbonate linear
911401820697	BN068C LED6/NW L600 TH G2	IK00	Polycarbonate linear
911401820797	BN068C LED6/WW L600 TH G2	IK00	Polycarbonate linear
911401820897	BN068C LED9/CW L900 TH G2	IK00	Polycarbonate linear
911401820997	BN068C LED9/NW L900 TH G2	IK00	Polycarbonate linear
911401821097	BN068C LED9/WW L900 TH G2	IK00	Polycarbonate linear
911401821197	BN068C LED12/CW L1200 TH G2	IK00	Polycarbonate linear
911401821297	BN068C LED12/NW L1200 TH G2	IK00	Polycarbonate linear
911401821397	BN068C LED12/WW L1200 TH G2	IK00	Polycarbonate linear
911401806387	BN017C LED50/840 3ft	IK03	Opal
911401806487	BN017C LED50/857 3ft	IK03	Opal
911401806187	BN017C LED60/840 X 2ft	IK03	Opal
911401806287	BN017C LED60/857 X 2ft	IK03	Opal

Approval and Application

Order Code	Full Product Name	Glow-wire test
911401805987	BN017C LED30/840 2ft	Temperature 650 °C, duration 30 s
911401806087	BN017C LED30/857 2ft	Temperature 650 °C, duration 30 s
911401818497	BN068C LED3/CW L300 G2	Temperature 850 °C, duration 5 s
911401818597	BN068C LED3/NW L300 G2	Temperature 850 °C, duration 5 s
911401818697	BN068C LED3/WW L300 G2	Temperature 850 °C, duration 5 s
911401818797	BN068C LED6/CW L600 G2	Temperature 850 °C, duration 5 s
911401818897	BN068C LED6/NW L600 G2	Temperature 850 °C, duration 5 s

Order Code	Full Product Name	Glow-wire test
911401818997	BN068C LED6/WW L600 G2	Temperature 850 °C, duration 5 s
911401819097	BN068C LED9/CW L900 G2	Temperature 850 °C, duration 5 s
911401819197	BN068C LED9/NW L900 G2	Temperature 850 °C, duration 5 s
911401819297	BN068C LED9/WW L900 G2	Temperature 850 °C, duration 5 s
911401819397	BN068C LED12/CW L1200 G2	Temperature 850 °C, duration 5 s
911401819497	BN068C LED12/NW L1200 G2	Temperature 850 °C, duration 5 s
911401819597	BN068C LED12/WW L1200 G2	Temperature 850 °C, duration 5 s
911401820297	BN068C LED3/CW L300 TH G2	Temperature 850 °C, duration 5 s
911401820497	BN068C LED3/WW L300 TH G2	Temperature 850 °C, duration 5 s
911401820597	BN068C LED6/CW L600 TH G2	Temperature 850 °C, duration 5 s
911401820697	BN068C LED6/NW L600 TH G2	Temperature 850 °C, duration 5 s
911401820797	BN068C LED6/WW L600 TH G2	Temperature 850 °C, duration 5 s
911401820897	BN068C LED9/CW L900 TH G2	Temperature 850 °C, duration 5 s
911401820997	BN068C LED9/NW L900 TH G2	Temperature 850 °C, duration 5 s
911401821097	BN068C LED9/WW L900 TH G2	Temperature 850 °C, duration 5 s
911401821197	BN068C LED12/CW L1200 TH G2	Temperature 850 °C, duration 5 s
911401821297	BN068C LED12/NW L1200 TH G2	Temperature 850 °C, duration 5 s
911401821397	BN068C LED12/WW L1200 TH G2	Temperature 850 °C, duration 5 s
911401806387	BN017C LED50/840 3ft	Temperature 650 °C, duration 30 s
911401806487	BN017C LED50/857 3ft	Temperature 650 °C, duration 30 s
911401806187	BN017C LED60/840 X 2ft	Temperature 650 °C, duration 30 s
911401806287	BN017C LED60/857 X 2ft	Temperature 650 °C, duration 30 s

Initial Performance (IEC Compliant)

Order Code	Full Product Name	Initial chromaticity
911401805987	BN017C LED30/840 2ft	(0.38, 0.38) SDCM<7
911401806087	BN017C LED30/857 2ft	(0.33, 0.34) SDCM<7
911401818497	BN068C LED3/CW L300 G2	SDCM<7
911401818597	BN068C LED3/NW L300 G2	SDCM<7
911401818697	BN068C LED3/WW L300 G2	SDCM<7
911401818797	BN068C LED6/CW L600 G2	SDCM<7
911401818897	BN068C LED6/NW L600 G2	SDCM<7
911401818997	BN068C LED6/WW L600 G2	SDCM<7
911401819097	BN068C LED9/CW L900 G2	SDCM<7
911401819197	BN068C LED9/NW L900 G2	SDCM<7
911401819297	BN068C LED9/WW L900 G2	SDCM<7
911401819397	BN068C LED12/CW L1200 G2	SDCM<7
911401819497	BN068C LED12/NW L1200 G2	SDCM<7
911401819597	BN068C LED12/WW L1200 G2	SDCM<7
911401820297	BN068C LED3/CW L300 TH G2	SDCM<7
911401820497	BN068C LED3/WW L300 TH G2	SDCM<7
911401820597	BN068C LED6/CW L600 TH G2	SDCM<7

Order Code	Full Product Name	Initial chromaticity
911401820697	BN068C LED6/NW L600 TH G2	SDCM<7
911401820797	BN068C LED6/WW L600 TH G2	SDCM<7
911401820897	BN068C LED9/CW L900 TH G2	SDCM<7
911401820997	BN068C LED9/NW L900 TH G2	SDCM<7
911401821097	BN068C LED9/WW L900 TH G2	SDCM<7
911401821197	BN068C LED12/CW L1200 TH G2	SDCM<7
911401821297	BN068C LED12/NW L1200 TH G2	SDCM<7
911401821397	BN068C LED12/WW L1200 TH G2	SDCM<7
911401806387	BN017C LED50/840 3ft	(0.38, 0.38) SDCM<7
911401806487	BN017C LED50/857 3ft	(0.33, 0.34) SDCM<7
911401806187	BN017C LED60/840 X 2ft	(0.38, 0.38) SDCM<7
911401806287	BN017C LED60/857 X 2ft	(0.33, 0.34) SDCM<7

© 2026 Signify Holding. All rights reserved. The information provided herein is subject to change, without notice. Signify does not give any representation or warranty as to the accuracy or completeness of the information included herein and shall not be liable for any action in reliance thereon. The information presented in this document is not intended as any commercial offer and does not form part of any quotation or contract, unless otherwise agreed by Signify. Philips and the Philips Shield Emblem are registered trademarks of Koninklijke Philips N.V.