JRB435 MBP-S 750 60 60 RAL

912401451273



Pole-mounting bracket 1 arm, 750 mm, 60 mm, 3°, RAL color, Mounting device diameter 60 mm

The UrbanWave collection adds subtle design to a set of luminaires and an environment, by night as well as by day. The design is contemporary, stands out in its simplicity and provides great lighting efficiency.

Light Technical

Effective projected area	0.095 m²

Mechanical and Housing

Fixation point length distance (Nom)	135 mm
Fixation diameter	Mounting device diameter 60 mm
Bracket tilt angle	3°
Bracket to luminaire diameter	60 mm
Bracket length	750 mm
Bracket color	RAL color

Bracket type	Pole-mounting bracket 1 arm
Net Weight (Piece)	6.900 kg

Approval and Application

CE mark	Yes
EU RoHS compliant	Yes

Sustainability Data

Non-virgin material ratio of the packaging	Cardboard > 80% recycled
Packaging Recyclable content ratio	Cardboard recycling rate > 80%
Packaging Material	Cardboard

Dimensional drawing

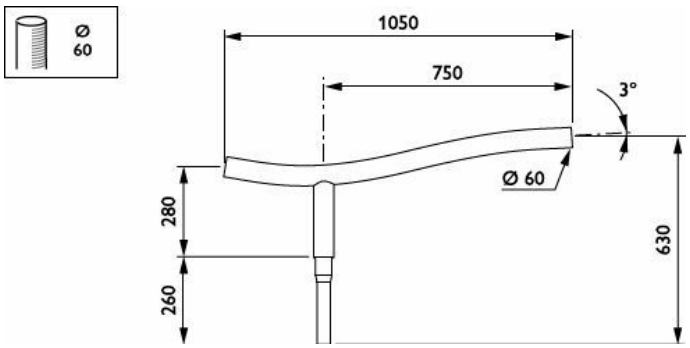

Related Documents

Photometric and IES	Document Name	Download
Revit file	PHL_Urbanwave_SA_bracket-JRB435_S750_D60-3D-RFA.zip	Download

Product Data

Order product name	JRB435 MBP-S 750 60 60 RAL
Full product name	JRB435 MBP-S 750 60 60 RAL
Full product code	871869693379400
Order code	912401451273
Material Nr. (12NC)	912401451273
Numerator - Quantity Per Pack	1
EAN/UPC - Product/Case	8718696933794
Numerator - Packs per outer box	1
EAN/UPC - Case	8718696933794

© 2026 Signify Holding. All rights reserved. The information provided herein is subject to change, without notice. Signify does not give any representation or warranty as to the accuracy or completeness of the information included herein and shall not be liable for any action in reliance thereon. The information presented in this document is not intended as any commercial offer and does not form part of any quotation or contract, unless otherwise agreed by Signify. All trademarks are owned by Signify Holding or their respective owners.