PHILIPS

DN068B G2 LED4/865 PSU D75

911401861487



SmartBright Pro Downlight gen2, 3.8 W, 400 lm, 6500 K, Beam angle 110°, Textured, IP20(IP44 front)

The SmartBright Pro Downlight comes offering reliable lighting performance with recessed installation, suitable for diversified applications. Full cut out size from D75 to D200, full CCT range covering 3000K, 4000K and 6500K, lumen output covers 400lm to 2000lm, eye comfort experience with low flicker lighting can attract you more with its elegant design.

General Information

Number of gear units	1 unit
Gear	EB [Electronic]
Driver included	Yes
Light source engine type	LED
Value ladder	Value
Warranty period	3 years

Light Technical

Luminous Flux	400 lm
Correlated Color Temperature (Nom)	6500 K
Luminous Efficacy (rated) (Nom)	105 lm/W
Color rendering index (CRI)	80

Number of light sources	1
Beam angle of light source	110 degree(s)
Light source color	865 cool daylight
Optic type	Beam angle 110°
Luminaire light beam spread	110°
Unified glare rating CEN	32

Operating and Electrical

Input Voltage	220 to 240 V
Line Frequency	50 or 60 Hz
Power Consumption	3.8 W
Power Factor (Fraction)	0.9
Connection	Flying leads/wires
Cable	2×0.75mm²
Number of products on MCB of 16 A type B	-
Suitable for random switching	No
Protection class IEC	Safety class II

Controls and Dimming

Dimmable	-
Control interface	-
Maximum dim level	Not applicable

Mechanical and Housing

Housing Material	Polycarbonate
Reflector material	-
Optic material	Polycarbonate
Optical cover material	Polycarbonate
Housing Color	White
Mounting device	Recessed mounting box round
Optical cover finish	Textured
Overall height	35 mm
Overall diameter	90 mm
Ingress protection code	IP20(IP44 front)
Mech. impact protection code	IK03 [0.3 J]
Optical cover type	Polycarbonate micro lens optic
Net Weight (Piece)	0.050 kg

Approval and Application

Glow-wire test	Temperature 650 °C, duration 30 s
Flammability mark	For mounting on normally flammable surfaces
CE mark	No
ENEC mark	-
Photobiological risk	Photobiological risk group 0 @ 200mm to EN62471
Photobiological risk specification	0.2 m
EU RoHS compliant	Yes
Performance ambient temperature Tq	25 °C
Ambient temperature range	-20 to +40 °C

Initial Performance (IEC Compliant)

Luminous flux tolerance	+/-10%
Initial chromaticity	(0.31, 0.34) SDCM≤6
Power consumption tolerance	+/-10%

Product Data

Order product name	DN068B G2 LED4/865 PSU D75
Full product name	DN068B G2 LED4/865 PSU D75
Full product code	872110330216899
Order code	911401861487
Material Nr. (12NC)	911401861487
Numerator - Quantity Per Pack	1
EAN/UPC - Product/Case	8721103302168
Numerator - Packs per outer box	40
EAN/UPC - Case	8721103302434

Dimensional drawing

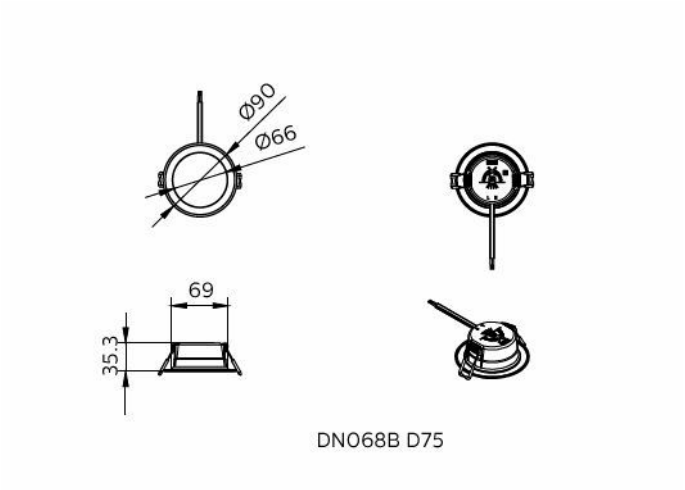

Related Documents

Documents and certificates	Document Name	Download
Installation Instructions	DN068-G2-MI.pdf	Download

Photometry and lighting design	Document Name	Download
IES File	DN068B-G2-LED4-PSU-D75.ies	Download

© 2026 Signify Holding. All rights reserved. The information provided herein is subject to change, without notice. Signify does not give any representation or warranty as to the accuracy or completeness of the information included herein and shall not be liable for any action in reliance thereon. The information presented in this document is not intended as any commercial offer and does not form part of any quotation or contract, unless otherwise agreed by Signify. Philips and the Philips Shield Emblem are registered trademarks of Koninklijke Philips N.V.