PHILIPS

DL252 G2 SF RD 900 65K 12W 6" EMC

929004655001



Latam Downlight, 12 W, 900 lm, 6500 K, Wide beam, White

Aluminium, White, Power supply unit, 900 lm, 12 W, 75 lm/W, 6500 K, (0.313, 0.337) <6SDCM, Wide beam, IP20 | Finger-protected, IK01 | 0.15 J, Safety class II, Flying leads/wires

General Information

Light source replaceable	No
Number of gear units	1 unit
Driver included	Yes
Nominal lifetime	25,000 hour(s)
Switching Cycle	12,500
Warranty period	1 years

Light Technical

Luminous Flux	900 lm
Correlated Color Temperature (Nom)	6500 K
Luminous Efficacy (rated) (Nom)	75 lm/W
Color rendering index (CRI)	80
Number of light sources	1
Light source color	865 cool daylight
Optic type	Wide beam
Luminaire light beam spread	110°
Photobiological safety according to EN 62471	RG1

Operating and Electrical

Input Voltage	110 to 240 V
Input Frequency	50 or 60 Hz
Inrush current	22.7 A
Inrush time	0.01274 ms
Power Consumption	12 W
Warm-up time to 60% light	<2 s
Power Factor (Fraction)	0.9
Connection	Flying leads/wires
Cable	Cable 0.2 m without plug
Number of products on MCB of 16 A type B	209
Suitable for random switching	No
Protection class IEC	Safety class II

Controls and Dimming

Dimmable	No
Driver/power unit/transformer	Power supply unit
Constant light output	No

Mechanical and Housing

Housing Material	Aluminium
Reflector material	-
Optic material	Glass
Fixation material	Steel
Housing Color	White
Overall height	28 mm
Overall diameter	161 mm
Net weight	0.247 kg
Ingress protection code	IP20 [Finger-protected]
Mech. impact protection code	IK01 [0.15 J]
Net Weight (Piece)	0.247 kg

Approval and Application

Glow-wire test	Temperature 650 °C, duration 30 s
Flammability mark	For mounting on normally flammable surfaces
EU RoHS compliant	Yes
Warranty	2 year(s)
EyeComfort	Yes
LED Innovations	EyeComfort
Ambient temperature range	-20 to +40 °C

Initial Performance (IEC Compliant)

Luminous flux tolerance	+/-10%
Initial chromaticity	(0.313, 0.337) <6SDCM
Power consumption tolerance	+/-10%

Over Time Performance (IEC Compliant)

Median useful life L70B50	25,000 hour(s)

Product Data

Order product name	DL252 G2 SF RD 900 65K 12W 6" EMC
Full product name	DL252 G2 SF RD 900 65K 12W 6" EMC
Full product code	872016938565800
Order code	929004655001
Material Nr. (12NC)	929004655001
Numerator - Quantity Per Pack	1
EAN/UPC - Product/Case	8720169385658
Numerator - Packs per outer box	20
EAN/UPC - Case	8720169385665

Dimensional drawing

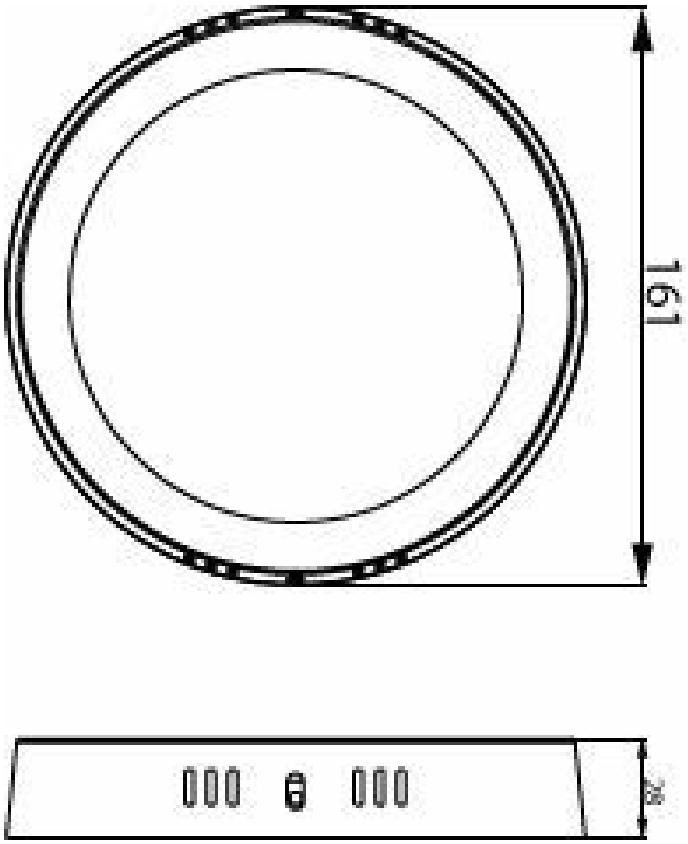

Photometric data

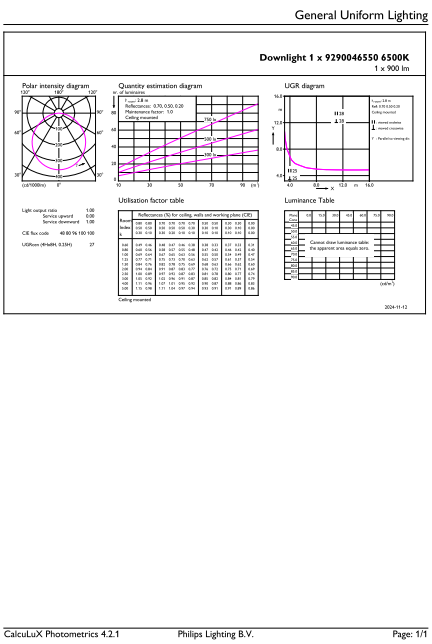
General Uniform Lighting

Downlight 1 x 9290046550 6500K
1 x 900 lm

Polar intensity diagram

Quantity estimation diagram

UGR diagram

Utilisation factor table

Luminance Table

CalcuLuX Photometrics 4.2.1 Philips Lighting B.V. Page: 1/1

General uniform lighting - DL252 G2 SF RD 900 65K 12W 6" EMC

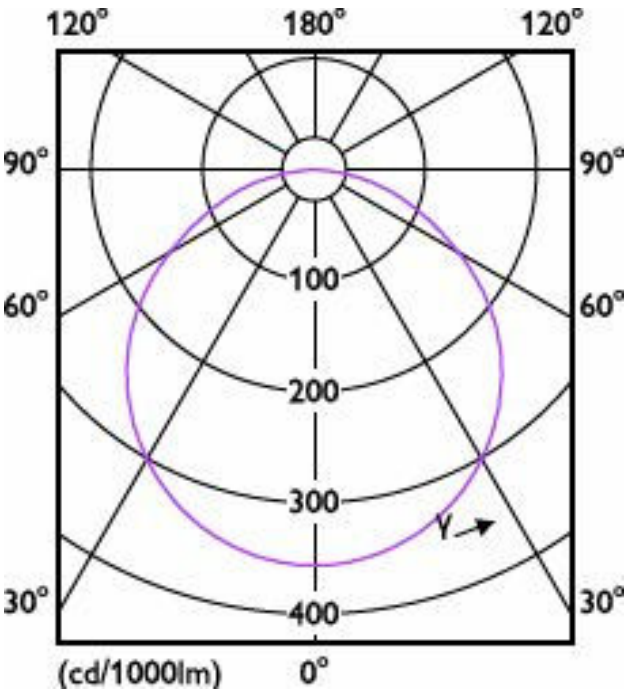

Light Distribution Diagram - DL252 G2 SF RD 900 65K 12W 6" EMC

Related Documents

Documents and certificates	Document Name	Download
Installation Instructions	PHILIPS-DL252-EMC-MI-Surface-User-Manual-20240822-INI.pdf	Download
Environmental Product Declaration	Philips-External-Slim-Downlight-DL252-4-6-8-929004653601-EPD.pdf	Download

Photometry and lighting design	Document Name	Download
IES File	DL252-G2-SF-RD-900-65K-12W-6inch-EMC-9290046550-IES.ies	Download

© 2026 Signify Holding. All rights reserved. The information provided herein is subject to change, without notice. Signify does not give any representation or warranty as to the accuracy or completeness of the information included herein and shall not be liable for any action in reliance thereon. The information presented in this document is not intended as any commercial offer and does not form part of any quotation or contract, unless otherwise agreed by Signify. Philips and the Philips Shield Emblem are registered trademarks of Koninklijke Philips N.V.