PHILIPS

RS350 G2 SF Sq L100 9W 40K 24D 1H

929003221410



Deep Recessed Spotlight, 9 W, 800 lm, 4000 K, Beam angle 24°, White

Aluminum die-cast, White, Power supply unit (On/Off), 800 lm, 9 W, 88 lm/W, 4000 K, ((, 0.3804 , , 0.3767)) 5SDCM, Beam angle 24°, Clear, Polycarbonate, IP20 | Finger-protected, IK03 | 0.3 J, Safety class II, Flying leads/wires

General Information

Light source replaceable	No
Number of gear units	26 units
Driver included	Yes
Switching Cycle	15,000
Lighting Technology	LED
Warranty period	1 years

Light Technical

Luminous Flux	800 lm
Correlated Color Temperature (Nom)	4000 K
Luminous Efficacy (rated) (Nom)	88 lm/W
Color rendering index (CRI)	90
Light source color	940 neutral white
Optic type	Beam angle 24°
Luminaire light beam spread	24°

Operating and Electrical

Input Voltage	220 to 240 V
Line Frequency	50 or 60 Hz
Input Frequency	50 or 60 Hz
Inrush current	8.5 A
Inrush time	0.18 ms
Power Consumption	9 W
Power Factor (Fraction)	0.5
Connection	Flying leads/wires
Cable	Cable 0.7 m without plug
Number of products on MCB of 16 A type B	110
Suitable for random switching	No
Protection class IEC	Safety class II

Controls and Dimming

Dimmable	No
Driver/power unit/transformer	Power supply unit (On/Off)
Constant light output	No

Mechanical and Housing

Housing Material	Aluminum die-cast
Reflector material	Polycarbonate aluminum coated
Optic material	Polycarbonate
Optical cover material	Polycarbonate
Fixation material	Steel
Housing Color	White
Optical cover finish	Clear
Overall length	100 mm
Overall width	100 mm
Overall height	140 mm
Dimensions (Height x Width x Depth)	140 x 100 x 100 mm
Ingress protection code	IP20 [Finger-protected]
Mech. impact protection code	IK03 [0.3 J]
Net Weight (Piece)	0.700 kg

Approval and Application

Glow-wire test	Temperature 650 °C, duration 30 s
Flammability mark	For mounting on normally flammable surfaces
EU RoHS compliant	Yes
EyeComfort	Yes
Ambient temperature range	-20 to +40 °C

Initial Performance (IEC Compliant)

Luminous flux tolerance	+/-10%
Initial chromaticity	《 , 0.3804 ， , 0.3767 》5SDCM
Power consumption tolerance	+/-10%

Over Time Performance (IEC Compliant)

Driver failure rate at 5000 h	0.015 %
Median useful life L70B50	25,000 hour(s)

Product Data

Order product name	RS350 G2 SF Sq L100 9W 40K 24D 1H
Full product name	RS350 G2 SF Sq L100 9W 40K 24D 1H
Full product code	692234195888500
Order code	929003221410
Material Nr. (12NC)	929003221410
Numerator - Quantity Per Pack	1
EAN/UPC - Product/Case	6922341958885
Numerator - Packs per outer box	12
EAN/UPC - Case	6922341958892

Dimensional drawing

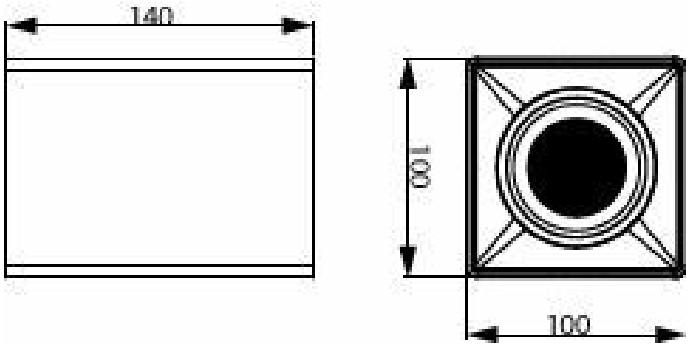

Photometric data

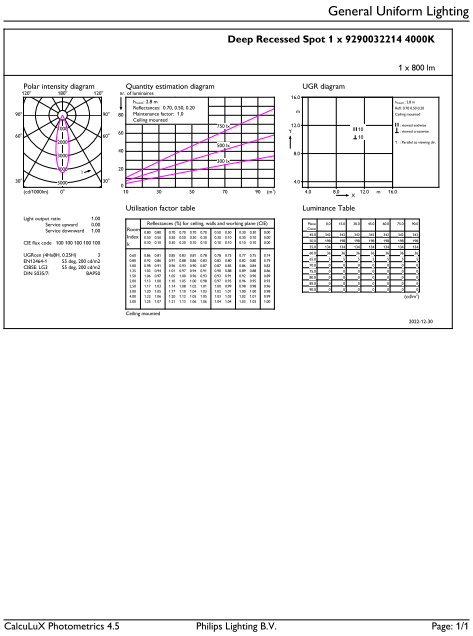
General Uniform Lighting

Deep Recessed Spot 1 x 9290032214 4000K

1 x 800 lm

Polar intensity diagram

Quantity estimation diagram

UGR diagram

Utilisation factor table

Luminance Table

CalcuLuX Photometrics 4.5 Philips Lighting B.V. Page: 1/1

General uniform lighting - RS350 G2 SF Sq L100 9W 40K 24D 1H

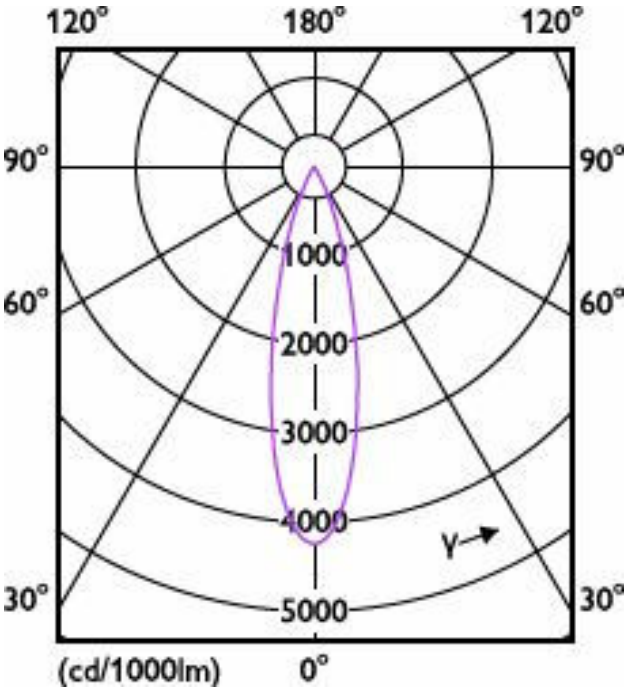

Light Distribution Diagram - RS350 G2 SF Sq L100 9W 40K 24D 1H

Related Documents

Documents and certificates	Document Name	Download
Installation Instructions	324165986731_114_AW_SF_L100-INI.pdf	Download

Photometry and lighting design	Document Name	Download
IES File	RS350_G2_SF_SQ_L100_9W_40K_24D_1H-IES.ies	Download

© 2026 Signify Holding. All rights reserved. The information provided herein is subject to change, without notice. Signify does not give any representation or warranty as to the accuracy or completeness of the information included herein and shall not be liable for any action in reliance thereon. The information presented in this document is not intended as any commercial offer and does not form part of any quotation or contract, unless otherwise agreed by Signify. Philips and the Philips Shield Emblem are registered trademarks of Koninklijke Philips N.V.