PHILIPS

Lighting



Less Hassle, More Savings

Essential SmartBright LED Downlight

Essential SmartBright G2 LED Downlight is value for money product with high efficacy, good quality and reliability. It offers multiple configurations from 300lm to 2000lm output, to replace conventional downlight. It can be used for shopping mall, retail store, residential and office. It's an ideal product family to distribute in trade market.

Benefits

- Reliability and safety: meets national and international regulation
- Energy saving: High system efficacy with lower power consumption
- Diversity: One stop shopping with multiple choices of recess round, square as well as surface-mount to fit your dedicated applications
- Easy to install with slim design

Features

- Long life time: 20Khrs to 30Khrs(L70B50@25°C)
- System efficiency: up to 85lm/W
- One family offers recess round, square and surface mount options
- Slim design: 33mm housing body height

Application

- Retail
- Office
- Residential

Essential SmartBright LED Downlight

Versions



Downlight DN020B G3



Downlight DN500B G3 RD

Dimensional drawing

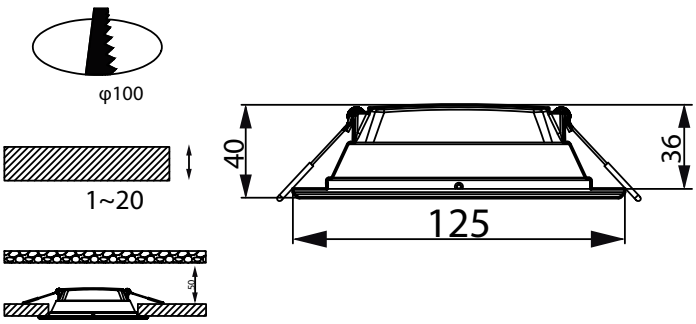

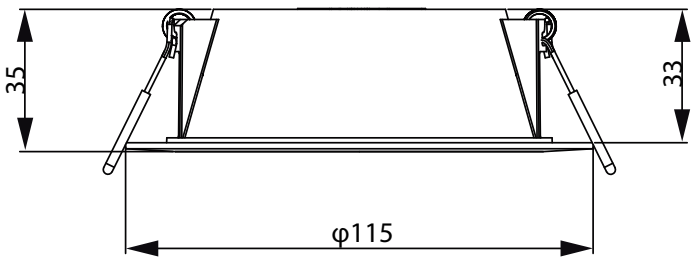

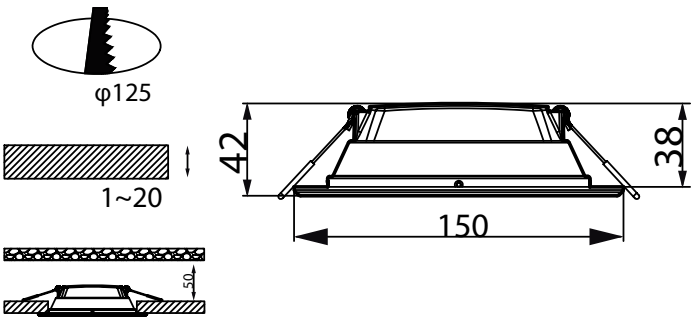

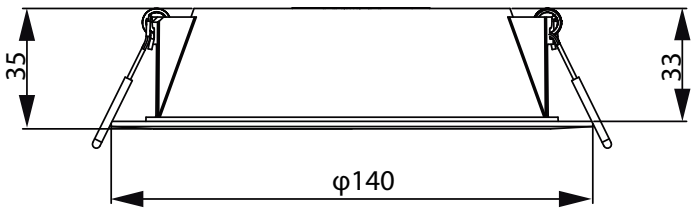

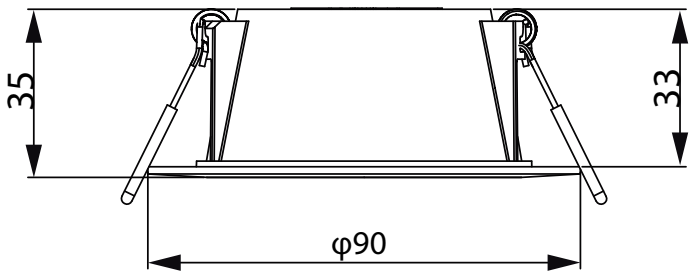

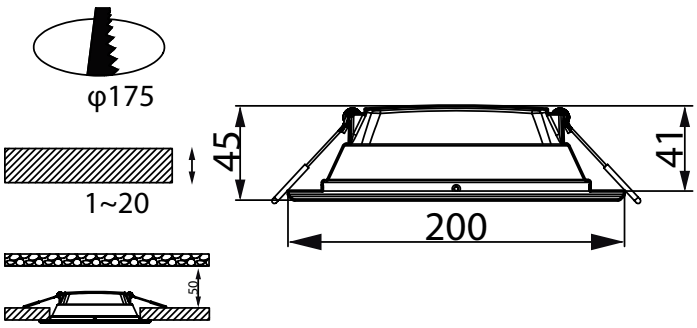

Dimensional drawing

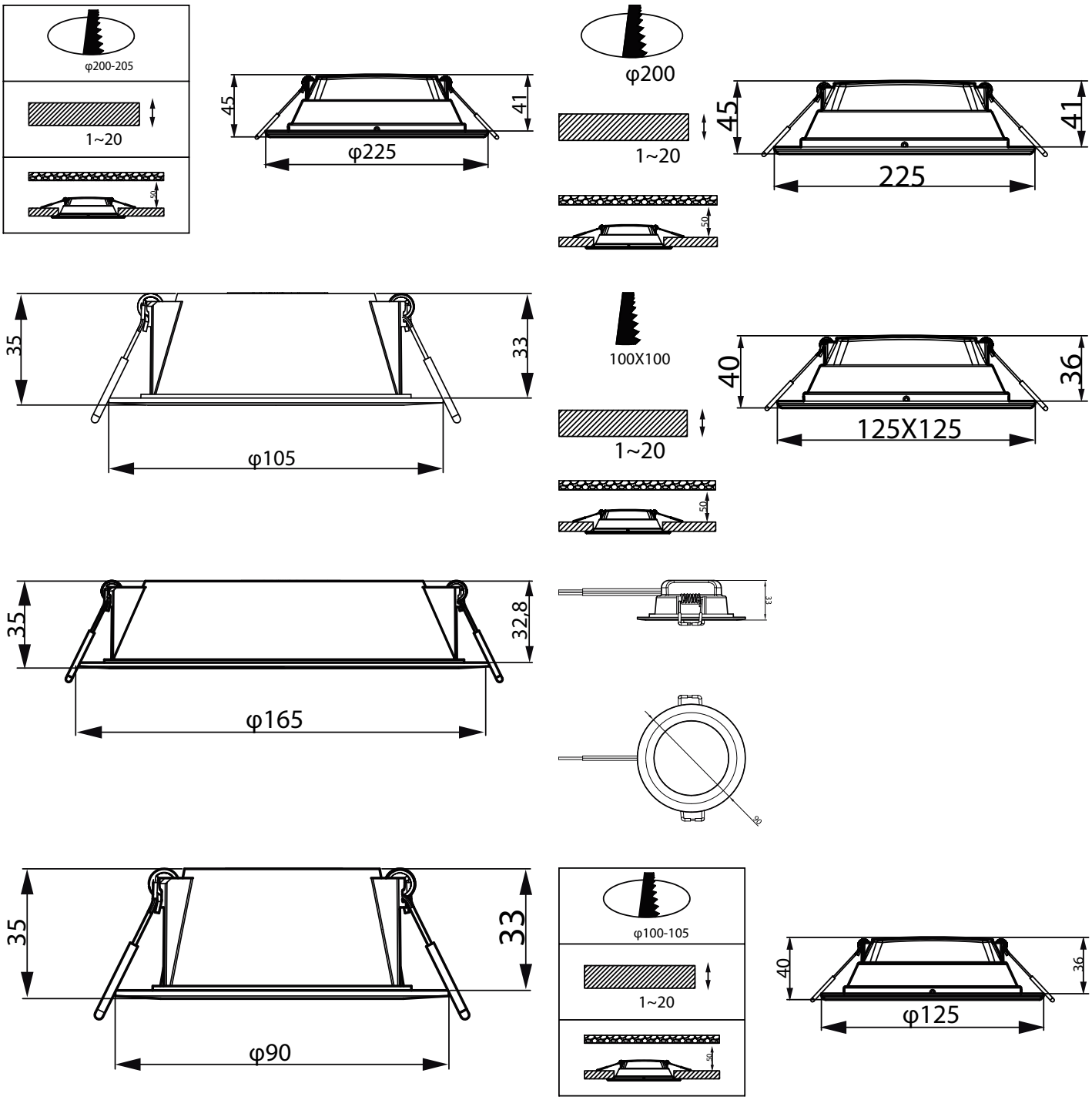

Dimensional drawing

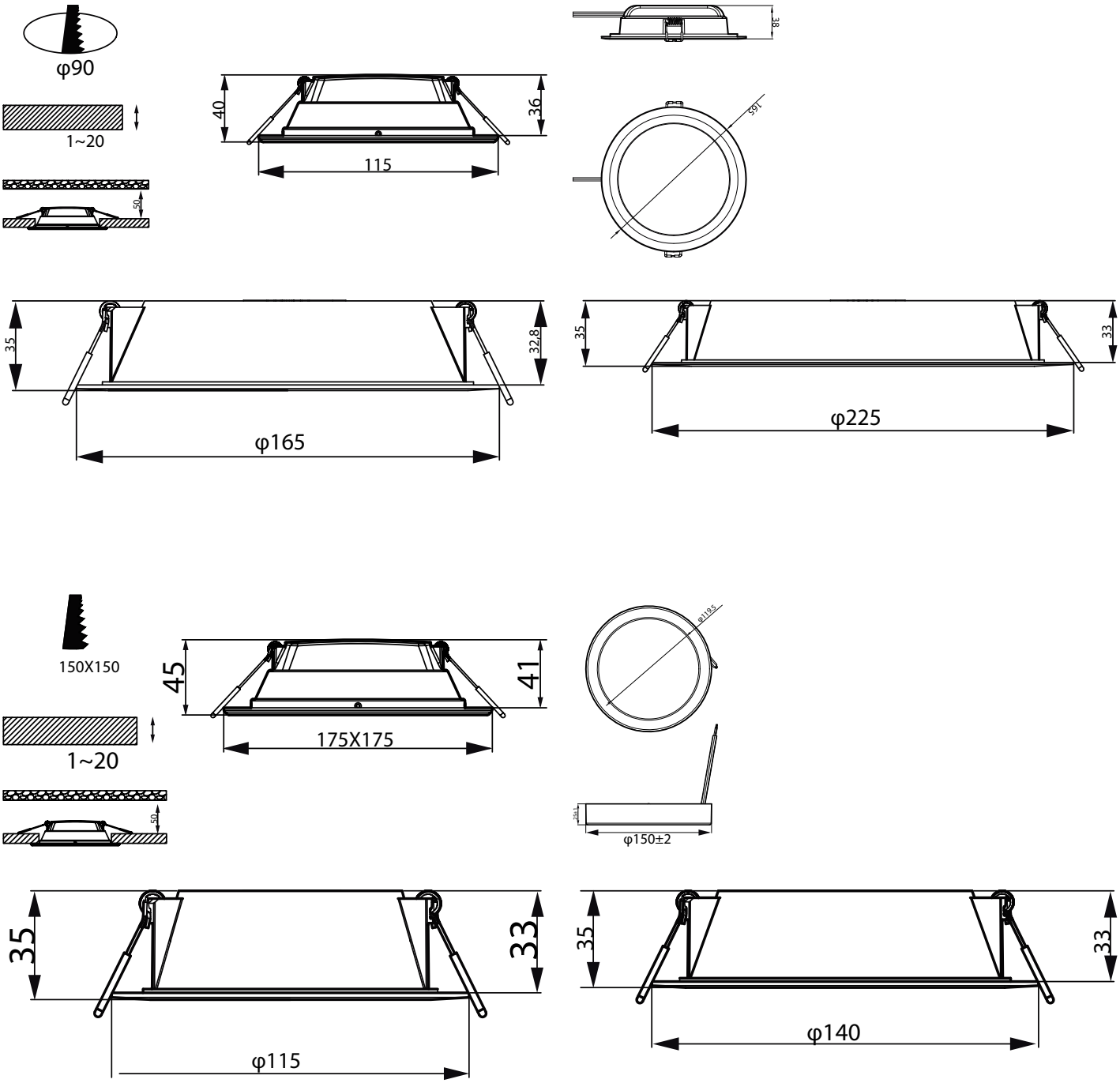

Dimensional drawing

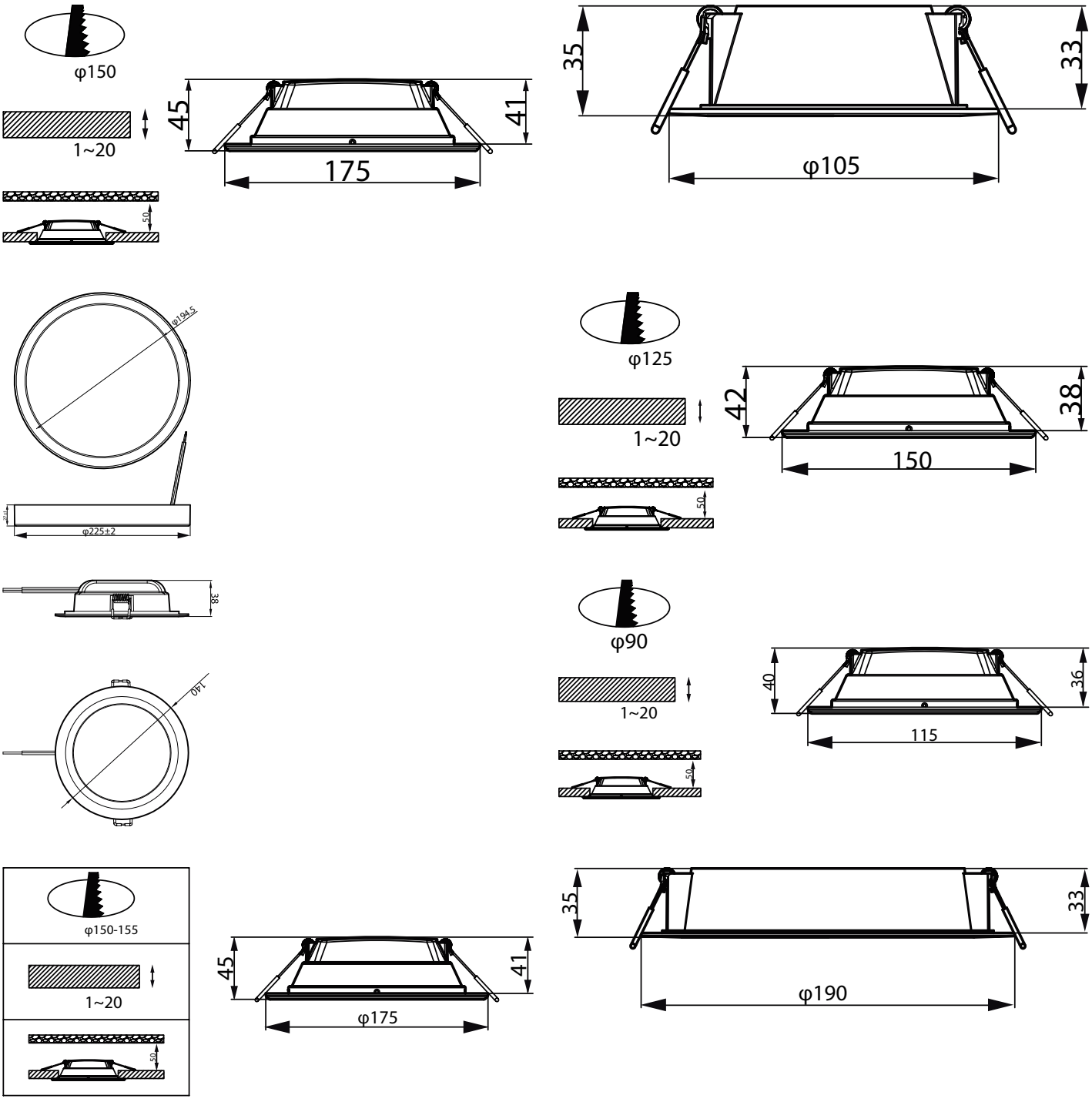

Dimensional drawing

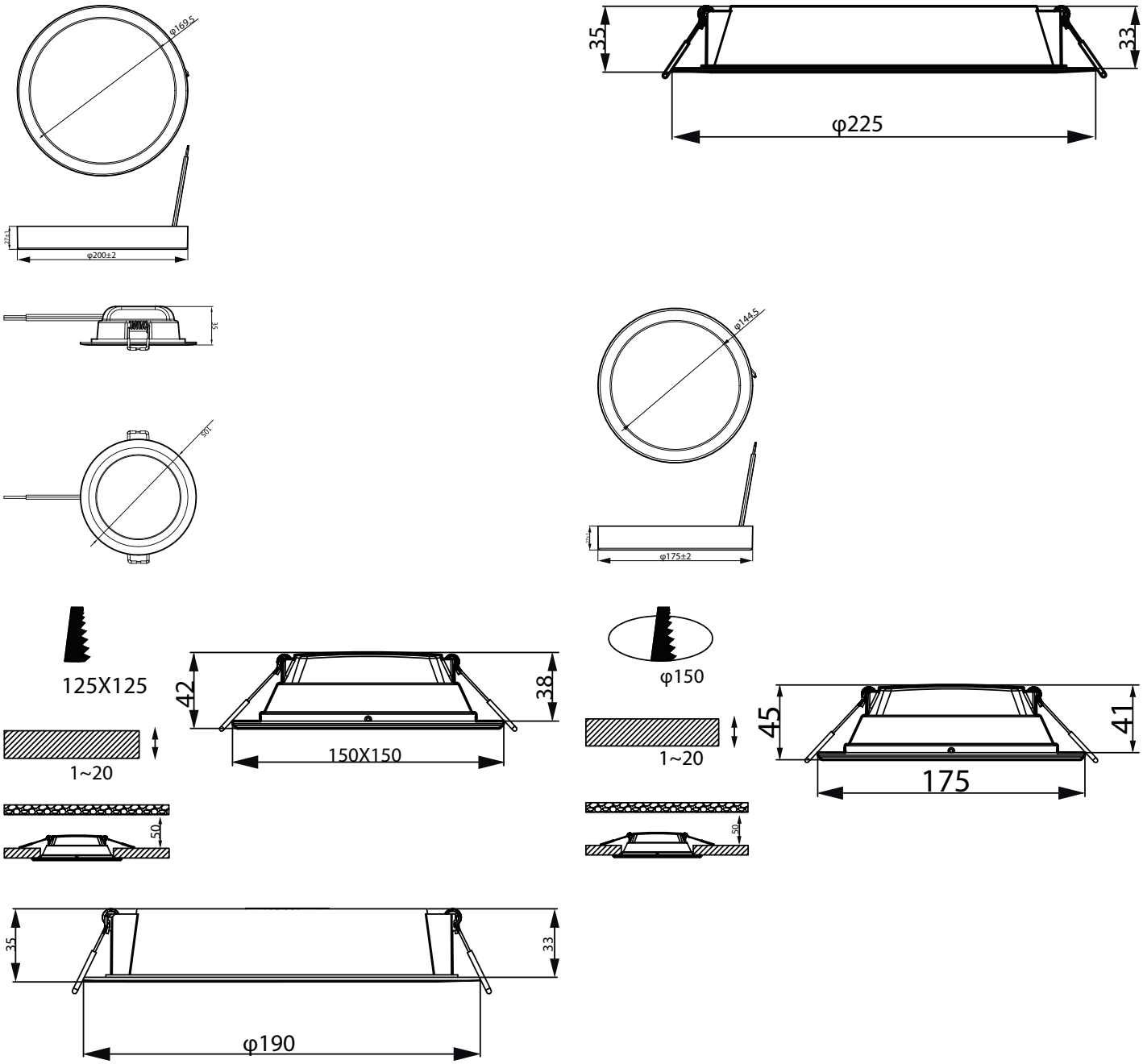

Essential SmartBright LED Downlight

General Information	
Light source replaceable	No
Light Technical	
Color rendering index (CRI)	80
Operating and Electrical	
Protection class IEC	Safety class II
Input Voltage	220 to 240 V
Controls and Dimming	
Dimmable	No
Mechanical and Housing	
Housing Color	White
Mech. impact protection code	IK03

General Information

Order Code	Full Product Name	Driver included	Number of gear units
929002508208	DN020B G3 LED3/WW 3.5W 220-240V D80 GM	-	-
929002508308	DN020B G3 LED3/NW 3.5W 220-240V D80 GM	-	-
929002508408	DN020B G3 LED3/CW 3.5W 220-240V D80 GM	-	-
929002508608	DN020B G3 LED4/NW 4.5W 220-240V D90 GM	-	-
929002509108	DN020B G3 LED6/WW 7W 220-240V D125 GM	-	-
929002509208	DN020B G3 LED6/NW 7W 220-240V D125 GM	-	-
929002509308	DN020B G3 LED6/CW 7W 220-240V D125 GM	-	-
929002509708	DN020B G3 LED9/WW 10.5W 220-240V D150 GM	-	-
929002509808	DN020B G3 LED9/NW 10.5W 220-240V D150 GM	-	-
929002509908	DN020B G3 LED9/CW 10.5W 220-240V D150 GM	-	-
929003269510	DN200 G3 LED3 830 3.5W D80 CN	Yes	1 unit
929003269610	DN200 G3 LED3 840 3.5W D80 CN	Yes	1 unit
929003269710	DN200 G3 LED3 865 3.5W D80 CN	Yes	1 unit
929003269810	DN200 G3 LED4 830 4.5W D90 CN	Yes	1 unit
929003269910	DN200 G3 LED4 840 4.5W D90 CN	Yes	1 unit
929003270010	DN200 G3 LED4 865 4.5W D90 CN	Yes	1 unit
929003270110	DN200 G3 LED6 830 6W D90 CN	Yes	1 unit
929003270210	DN200 G3 LED6 840 6W D90 CN	Yes	1 unit
929003270310	DN200 G3 LED6 865 6W D90 CN	Yes	1 unit
929003270410	DN200 G3 LED6 830 7W D100 CN	Yes	1 unit
929003270510	DN200 G3 LED6 840 7W D100 CN	Yes	1 unit
929003270610	DN200 G3 LED6 865 7W D100 CN	Yes	1 unit
929003270710	DN200 G3 LED6 830 6W D125 CN	Yes	1 unit
929003270810	DN200 G3 LED6 840 6W D125 CN	Yes	1 unit
929003270910	DN200 G3 LED6 865 6W D125 CN	Yes	1 unit
929003271010	DN200 G3 LED9 830 10.5W D125 CN	Yes	1 unit
929003271110	DN200 G3 LED9 840 10.5W D125 CN	Yes	1 unit
929003271210	DN200 G3 LED9 865 10.5W D125 CN	Yes	1 unit
929003271310	DN200 G3 LED9 830 9W D150 CN	Yes	1 unit
929003271410	DN200 G3 LED9 840 9W D150 CN	Yes	1 unit
929003271510	DN200 G3 LED9 865 9W D150 CN	Yes	1 unit
929003271610	DN200 G3 LED12 830 13W D150 CN	Yes	1 unit
929003271710	DN200 G3 LED12 840 13W D150 CN	Yes	1 unit
929003271810	DN200 G3 LED12 865 13W D150 CN	Yes	1 unit
929003271910	DN200 G3 LED15 830 16W D175 CN	Yes	1 unit
929003272010	DN200 G3 LED15 840 16W D175 CN	Yes	1 unit
929003272110	DN200 G3 LED15 865 16W D175 CN	Yes	1 unit
929003272210	DN200 G3 LED20 830 20W D200 CN	Yes	1 unit
929003272310	DN200 G3 LED20 840 20W D200 CN	Yes	1 unit
929003272410	DN200 G3 LED20 865 20W D200 CN	Yes	1 unit
929002674838	DN027B G3 LED6/WW 6W 220-240V L100 SQ	Yes	1 unit
929002674902	DN027B G3 LED6/NW 6W 220-240V L100 RU	Yes	1 unit
929002674938	DN027B G3 LED6/NW 6W 220-240V L100 SQ	Yes	1 unit
929002675002	DN027B G3 LED6/CW 6W 220-240V L100 RU	Yes	1 unit
929002675038	DN027B G3 LED6/CW 6W 220-240V L100 SQ	Yes	1 unit
929002675138	DN027B G3 LED9/WW 9W 220-240V L125 SQ	Yes	1 unit
929002675202	DN027B G3 LED9/NW 9W 220-240V L125 RU	Yes	1 unit

Essential SmartBright LED Downlight

Order Code	Full Product Name	Driver included	Number of gear units
929002675238	DN027B G3 LED9/NW 9W 220-240V L125 SQ	Yes	1 unit
929002675302	DN027B G3 LED9/CW 9W 220-240V L125 RU	Yes	1 unit
929002675338	DN027B G3 LED9/CW 9W 220-240V L125 SQ	Yes	1 unit
929002675438	DN027B G3 LED12/WW 12W 220-240V L150 SQ	Yes	1 unit
929002675502	DN027B G3 LED12/NW 12W 220-240V L150 RU	Yes	1 unit
929002675538	DN027B G3 LED12/NW 12W 220-240V L150 SQ	Yes	1 unit
929002675602	DN027B G3 LED12/CW 12W 220-240V L150 RU	Yes	1 unit
929002675638	DN027B G3 LED12/CW 12W 220-240V L150 SQ	Yes	1 unit
929003277708	DN020B G4 LED3/WW 3.5W 220-240V D80	Yes	1 unit
929003277808	DN020B G4 LED3/NW 3.5W 220-240V D80	Yes	1 unit
929003277908	DN020B G4 LED3/CW 3.5W 220-240V D80	Yes	1 unit
929003278017	DN020B G4 LED4/WW 4.5W 220-240V D90	Yes	1 unit
929003278117	DN020B G4 LED4/NW 4.5W 220-240V D90	Yes	1 unit
929003278217	DN020B G4 LED4/CW 4.5W 220-240V D90	Yes	1 unit
929003278317	DN020B G4 LED6/WW 6W 220-240V D90	Yes	1 unit
929003278417	DN020B G4 LED6/NW 6W 220-240V D90	Yes	1 unit
929003278517	DN020B G4 LED6/CW 6W 220-240V D90	Yes	1 unit
929003278608	DN020B G4 LED6/WW 7W 220-240V D100	Yes	1 unit
929003278708	DN020B G4 LED6/NW 7W 220-240V D100	Yes	1 unit
929003278808	DN020B G4 LED6/CW 7W 220-240V D100	Yes	1 unit
929003278908	DN020B G4 LED6/WW 6W 220-240V D125	Yes	1 unit
929003279008	DN020B G4 LED6/NW 6W 220-240V D125	Yes	1 unit
929003279108	DN020B G4 LED6/CW 6W 220-240V D125	Yes	1 unit
929003279217	DN020B G4 LED9/WW 10.5W 220-240V D125	Yes	1 unit
929003279317	DN020B G4 LED9/NW 10.5W 220-240V D125	Yes	1 unit
929003279417	DN020B G4 LED9/CW 10.5W 220-240V D125	Yes	1 unit
929003279508	DN020B G4 LED9/WW 9W 220-240V D150	Yes	1 unit
929003279608	DN020B G4 LED9/NW 9W 220-240V D150	Yes	1 unit
929003279708	DN020B G4 LED9/CW 9W 220-240V D150	Yes	1 unit
929003279817	DN020B G4 LED12/WW 13W 220-240V D150	Yes	1 unit
929003279917	DN020B G4 LED12/NW 13W 220-240V D150	Yes	1 unit
929003280017	DN020B G4 LED12/CW 13W 220-240V D150	Yes	1 unit
929003280117	DN020B G4 LED15/WW 16W 220-240V D175	Yes	1 unit
929003280217	DN020B G4 LED15/NW 16W 220-240V D175	Yes	1 unit
929003280317	DN020B G4 LED15/CW 16W 220-240V D175	Yes	1 unit
929003280417	DN020B G4 LED20/WW 20W 220-240V D200	Yes	1 unit
929003280517	DN020B G4 LED20/NW 20W 220-240V D200	Yes	1 unit
929003280617	DN020B G4 LED20/CW 20W 220-240V D200	Yes	1 unit
929002671502	DN027B G3 LED6/WW 6W 220-240V D90 RU	Yes	1 unit
929002671538	DN027B G3 LED6/WW 6W 220-240V D90 RD	Yes	1 unit
929002671602	DN027B G3 LED6/NW 6W 220-240V D90 RU	Yes	1 unit
929002671638	DN027B G3 LED6/NW 6W 220-240V D90 RD	Yes	1 unit
929002671702	DN027B G3 LED6/CW 6W 220-240V D90 RU	Yes	1 unit
929002671738	DN027B G3 LED6/CW 6W 220-240V D90 RD	Yes	1 unit
929002672138	DN027B G3 LED6/WW 6W 220-240V D100 RD	Yes	1 unit
929002672238	DN027B G3 LED6/NW 6W 220-240V D100 RD	Yes	1 unit
929002672338	DN027B G3 LED6/CW 6W 220-240V D100 RD	Yes	1 unit
929002672702	DN027B G3 LED9/WW 9W 220-240V D125 RU	Yes	1 unit
929002672738	DN027B G3 LED9/WW 9W 220-240V D125 RD	Yes	1 unit
929002672802	DN027B G3 LED9/NW 9W 220-240V D125 RU	Yes	1 unit

Essential SmartBright LED Downlight

Order Code	Full Product Name	Driver included	Number of gear units
929002672838	DN027B G3 LED9/NW 9W 220-240V D125 RD	Yes	1 unit
929002672902	DN027B G3 LED9/CW 9W 220-240V D125 RU	Yes	1 unit
929002672938	DN027B G3 LED9/CW 9W 220-240V D125 RD	Yes	1 unit
929002673302	DN027B G3 LED12/WW 12W 220-240V D150 RU	Yes	1 unit
929002673338	DN027B G3 LED12/WW 12W 220-240V D150 RD	Yes	1 unit
929002673402	DN027B G3 LED12/NW 12W 220-240V D150 RU	Yes	1 unit
929002673438	DN027B G3 LED12/NW 12W 220-240V D150 RD	Yes	1 unit
929002673502	DN027B G3 LED12/CW 12W 220-240V D150 RU	Yes	1 unit
929002673538	DN027B G3 LED12/CW 12W 220-240V D150 RD	Yes	1 unit
929002673938	DN027B G3 LED15/WW 15W 220-240 D175 RD	Yes	1 unit
929002674002	DN027B G3 LED15/NW 15W 220V D175 RU	Yes	1 unit
929002674038	DN027B G3 LED15/NW 15W 220-240 D175 RD	Yes	1 unit
929002674102	DN027B G3 LED15/CW 15W 220V D175 RU	Yes	1 unit
929002674138	DN027B G3 LED15/CW 15W 220-240 D175 RD	Yes	1 unit
929002674538	DN027B G3 LED20/WW 19W 220-240V D200 RD	Yes	1 unit
929002674602	DN027B G3 LED20/NW 19W 220-240V D200 RU	Yes	1 unit
929002674638	DN027B G3 LED20/NW 19W 220-240V D200 RD	Yes	1 unit
929002674702	DN027B G3 LED20/CW 19W 220-240V D200 RU	Yes	1 unit
929002674738	DN027B G3 LED20/CW 19W 220-240V D200 RD	Yes	1 unit

Order Code	Full Product Name	Driver included	Number of gear units
929002675738	DN027C G3 LED9/WW 9W 220-240V D150	Yes	1 unit
929002675838	DN027C G3 LED9/NW 9W 220-240V D150	Yes	1 unit
929002675938	DN027C G3 LED9/CW 9W 220-240V D150	Yes	1 unit
929002676038	DN027C G3 LED12/WW 12W 220-240V D175	Yes	1 unit
929002676138	DN027C G3 LED12/NW 12W 220-240V D175	Yes	1 unit
929002676238	DN027C G3 LED12/CW 12W 220-240V D175	Yes	1 unit
929002676338	DN027C G3 LED15/WW 15W 220-240V D200	Yes	1 unit
929002676438	DN027C G3 LED15/NW 15W 220-240V D200	Yes	1 unit
929002676538	DN027C G3 LED15/CW 15W 220-240V D200	Yes	1 unit
929002676638	DN027C G3 LED20/WW 19W 220-240V D225	Yes	1 unit
929002676738	DN027C G3 LED20/NW 19W 220-240V D225	Yes	1 unit
929002676838	DN027C G3 LED20/CW 19W 220-240V D225	Yes	1 unit
929002677040	DN500B G3 LED6/NW 6W 220V D90 RD	Yes	1 unit
929002677140	DN500B G3 LED6/CW 6W 220V D90 RD	Yes	1 unit
929002677340	DN500B G3 LED9/NW 9W 220V D125 RD	Yes	1 unit
929002677440	DN500B G3 LED9/CW 9W 220V D125 RD	Yes	1 unit
929002677640	DN500B G3 LED12/NW 12W 220V D150 RD	Yes	1 unit
929002677740	DN500B G3 LED12/CW 12W 220V D150 RD	Yes	1 unit

Light Technical

Order Code	Full Product Name	Correlated Color Temperature (Nom)	Luminous Efficacy (rated) (Nom)	Luminous Flux	Optic type
929002508208	DN020B G3 LED3/WW 3.5W 220-240V D80 GM	3000 K	80.00 lm/W	280 lm	-

Order Code	Full Product Name	Correlated Color Temperature (Nom)	Luminous Efficacy (rated) (Nom)	Luminous Flux	Optic type
929002508308	DN020B G3 LED3/NW 3.5W 220-240V D80 GM	4000 K	85.00 lm/W	300 lm	-

Essential SmartBright LED Downlight

Order Code	Full Product Name	Correlated Color Temperature (Nom)	Luminous Efficacy (rated) (Nom)	Luminous Flux	Optic type
929002508408	DN020B G3 LED3/CW 3.5W 220-240V D80 GM	6500 K	85.00 lm/W	300 lm	-
929002508608	DN020B G3 LED4/NW 4.5W 220-240V D90 GM	4000 K	88.00 lm/W	400 lm	-
929002509108	DN020B G3 LED6/WW 7W 220-240V D125 GM	3000 K	78.00 lm/W	550 lm	-
929002509208	DN020B G3 LED6/NW 7W 220-240V D125 GM	4000 K	85.00 lm/W	600 lm	-
929002509308	DN020B G3 LED6/CW 7W 220-240V D125 GM	6500 K	85.00 lm/W	600 lm	-
929002509708	DN020B G3 LED9/WW 10.5W 220-240V D150 GM	3000 K	80.00 lm/W	850 lm	-
929002509808	DN020B G3 LED9/NW 10.5W 220-240V D150 GM	4000 K	85.00 lm/W	900 lm	-
929002509908	DN020B G3 LED9/CW 10.5W 220-240V D150 GM	6500 K	85.00 lm/W	900 lm	-
929003269510	DN200 G3 LED3 830 3.5W D80 CN	3000 K	80 lm/W	280 lm	Matt optic decorative
929003269610	DN200 G3 LED3 840 3.5W D80 CN	4000 K	85 lm/W	300 lm	Matt optic decorative
929003269710	DN200 G3 LED3 865 3.5W D80 CN	6500 K	85 lm/W	300 lm	Matt optic decorative
929003269810	DN200 G3 LED4 830 4.5W D90 CN	3000 K	84 lm/W	380 lm	Matt optic decorative
929003269910	DN200 G3 LED4 840 4.5W D90 CN	4000 K	88 lm/W	400 lm	Matt optic decorative
929003270010	DN200 G3 LED4 865 4.5W D90 CN	6500 K	88 lm/W	400 lm	Matt optic decorative
929003270110	DN200 G3 LED6 830 6W D90 CN	3000 K	91 lm/W	550 lm	Matt optic decorative
929003270210	DN200 G3 LED6 840 6W D90 CN	4000 K	100 lm/W	600 lm	Matt optic decorative
929003270310	DN200 G3 LED6 865 6W D90 CN	6500 K	100 lm/W	600 lm	Matt optic decorative
929003270410	DN200 G3 LED6 830 7W D100 CN	3000 K	78 lm/W	550 lm	Matt optic decorative
929003270510	DN200 G3 LED6 840 7W D100 CN	4000 K	85 lm/W	600 lm	Matt optic decorative
929003270610	DN200 G3 LED6 865 7W D100 CN	6500 K	85 lm/W	600 lm	Matt optic decorative
929003270710	DN200 G3 LED6 830 6W D125 CN	3000 K	91 lm/W	550 lm	Matt optic decorative
929003270810	DN200 G3 LED6 840 6W D125 CN	4000 K	100 lm/W	600 lm	Matt optic decorative
929003270910	DN200 G3 LED6 865 6W D125 CN	6500 K	100 lm/W	600 lm	Matt optic decorative
929003271010	DN200 G3 LED9 830 10.5W D125 CN	3000 K	80 lm/W	850 lm	Matt optic decorative
929003271110	DN200 G3 LED9 840 10.5W D125 CN	4000 K	85 lm/W	900 lm	Matt optic decorative
929003271210	DN200 G3 LED9 865 10.5W D125 CN	6500 K	85 lm/W	900 lm	Matt optic decorative
929003271310	DN200 G3 LED9 830 9W D150 CN	3000 K	94 lm/W	850 lm	Matt optic decorative
929003271410	DN200 G3 LED9 840 9W D150 CN	4000 K	100 lm/W	900 lm	Matt optic decorative

Essential SmartBright LED Downlight

Order Code	Full Product Name	Correlated Color Temperature (Nom)	Luminous Efficacy (rated) (Nom)	Luminous Flux	Optic type
929003271510	DN200 G3 LED9 865 9W D150 CN	6500 K	100 lm/W	900 lm	Matt optic decorative
929003271610	DN200 G3 LED12 830 13W D150 CN	3000 K	88 lm/W	1,150 lm	Matt optic decorative
929003271710	DN200 G3 LED12 840 13W D150 CN	4000 K	92 lm/W	1,200 lm	Matt optic decorative
929003271810	DN200 G3 LED12 865 13W D150 CN	6500 K	92 lm/W	1,200 lm	Matt optic decorative
929003271910	DN200 G3 LED15 830 16W D175 CN	3000 K	90 lm/W	1,450 lm	Matt optic decorative
929003272010	DN200 G3 LED15 840 16W D175 CN	4000 K	93 lm/W	1,500 lm	Matt optic decorative
929003272110	DN200 G3 LED15 865 16W D175 CN	6500 K	93 lm/W	1,500 lm	Matt optic decorative
929003272210	DN200 G3 LED20 830 20W D200 CN	3000 K	95 lm/W	1,900 lm	Matt optic decorative
929003272310	DN200 G3 LED20 840 20W D200 CN	4000 K	100 lm/W	2,000 lm	Matt optic decorative
929003272410	DN200 G3 LED20 865 20W D200 CN	6500 K	100 lm/W	2,000 lm	Matt optic decorative
929002674838	DN027B G3 LED6/WW 6W 220-240V L100 SQ	3000 K	100.00 lm/W	600 lm	Beam angle 110°
929002674902	DN027B G3 LED6/NW 6W 220-240V L100 RU	4000 K	100.00 lm/W	600 lm	Beam angle 110°
929002674938	DN027B G3 LED6/NW 6W 220-240V L100 SQ	4000 K	100.00 lm/W	600 lm	Beam angle 110°
929002675002	DN027B G3 LED6/CW 6W 220-240V L100 RU	6500 K	100.00 lm/W	600 lm	Beam angle 110°
929002675038	DN027B G3 LED6/CW 6W 220-240V L100 SQ	6500 K	100.00 lm/W	600 lm	Beam angle 110°
929002675138	DN027B G3 LED9/WW 9W 220-240V L125 SQ	3000 K	100.00 lm/W	900 lm	Beam angle 110°
929002675202	DN027B G3 LED9/NW 9W 220-240V L125 RU	4000 K	105.00 lm/W	950 lm	Beam angle 110°
929002675238	DN027B G3 LED9/NW 9W 220-240V L125 SQ	4000 K	105.00 lm/W	950 lm	Beam angle 110°
929002675302	DN027B G3 LED9/CW 9W 220-240V L125 RU	6500 K	105.00 lm/W	950 lm	Beam angle 110°
929002675338	DN027B G3 LED9/CW 9W 220-240V L125 SQ	6500 K	105.00 lm/W	950 lm	Beam angle 110°
929002675438	DN027B G3 LED12/WW 12W 220-240V L150 SQ	3000 K	100.00 lm/W	1,200 lm	Beam angle 110°
929002675502	DN027B G3 LED12/NW 12W 220-240V L150 RU	4000 K	108.00 lm/W	1,300 lm	Beam angle 110°
929002675538	DN027B G3 LED12/NW 12W 220-240V L150 SQ	4000 K	108.00 lm/W	1,300 lm	Beam angle 110°
929002675602	DN027B G3 LED12/CW 12W 220-240V L150 RU	6500 K	108.00 lm/W	1,300 lm	Beam angle 110°
929002675638	DN027B G3 LED12/CW 12W 220-240V L150 SQ	6500 K	108.00 lm/W	1,300 lm	Beam angle 110°
929003277708	DN020B G4 LED3/WW 3.5W 220-240V D80	3000 K	80 lm/W	280 lm	Beam angle 110°
929003277808	DN020B G4 LED3/NW	4000 K	85 lm/W	300 lm	Beam angle 110°

Essential SmartBright LED Downlight

Order Code	Full Product Name	Correlated Color Temperature (Nom)	Luminous Efficacy (rated) (Nom)	Luminous Flux	Optic type
	3.5W 220-240V D80				
929003277908	DN020B G4 LED3/CW 3.5W 220-240V D80	6500 K	85 lm/W	300 lm	Beam angle 110°
929003278017	DN020B G4 LED4/WW 4.5W 220-240V D90	3000 K	84 lm/W	380 lm	Beam angle 110°
929003278117	DN020B G4 LED4/NW 4.5W 220-240V D90	4000 K	88 lm/W	400 lm	Beam angle 110°
929003278217	DN020B G4 LED4/CW 4.5W 220-240V D90	6500 K	88 lm/W	400 lm	Beam angle 110°
929003278317	DN020B G4 LED6/WW 6W 220-240V D90	3000 K	91 lm/W	550 lm	Beam angle 110°
929003278417	DN020B G4 LED6/NW 6W 220-240V D90	4000 K	100 lm/W	600 lm	Beam angle 110°
929003278517	DN020B G4 LED6/CW 6W 220-240V D90	6500 K	100 lm/W	600 lm	Beam angle 110°
929003278608	DN020B G4 LED6/WW 7W 220-240V D100	3000 K	78 lm/W	550 lm	Beam angle 110°
929003278708	DN020B G4 LED6/NW 7W 220-240V D100	4000 K	85 lm/W	600 lm	Beam angle 110°
929003278808	DN020B G4 LED6/CW 7W 220-240V D100	6500 K	85 lm/W	600 lm	Beam angle 110°
929003278908	DN020B G4 LED6/WW 6W 220-240V D125	3000 K	91 lm/W	550 lm	Beam angle 110°
929003279008	DN020B G4 LED6/NW 6W 220-240V D125	4000 K	100 lm/W	600 lm	Beam angle 110°
929003279108	DN020B G4 LED6/CW 6W 220-240V D125	6500 K	100 lm/W	600 lm	Beam angle 110°
929003279217	DN020B G4 LED9/WW 10.5W 220-240V D125	3000 K	80 lm/W	850 lm	Beam angle 110°
929003279317	DN020B G4 LED9/NW 10.5W 220-240V D125	4000 K	85 lm/W	900 lm	Beam angle 110°
929003279417	DN020B G4 LED9/CW 10.5W 220-240V D125	6500 K	85 lm/W	900 lm	Beam angle 110°
929003279508	DN020B G4 LED9/WW 9W 220-240V D150	3000 K	94 lm/W	850 lm	Beam angle 110°
929003279608	DN020B G4 LED9/NW 9W 220-240V D150	4000 K	100 lm/W	900 lm	Beam angle 110°
929003279708	DN020B G4 LED9/CW 9W 220-240V D150	6500 K	100 lm/W	900 lm	Beam angle 110°
929003279817	DN020B G4 LED12/WW 13W 220-240V D150	3000 K	88 lm/W	1,150 lm	Beam angle 110°
929003279917	DN020B G4 LED12/NW 13W 220-240V D150	4000 K	92 lm/W	1,200 lm	Beam angle 110°
929003280017	DN020B G4 LED12/CW 13W 220-240V D150	6500 K	92 lm/W	1,200 lm	Beam angle 110°
929003280117	DN020B G4 LED15/WW	3000 K	90 lm/W	1,450 lm	Beam angle 110°

Essential SmartBright LED Downlight

Order Code	Full Product Name	Correlated Color Temperature (Nom)	Luminous Efficacy (rated) (Nom)	Luminous Flux	Optic type
	16W 220-240V D175				
929003280217	DN020B G4 LED15/NW 16W 220-240V D175	4000 K	93 lm/W	1,500 lm	Beam angle 110°
929003280317	DN020B G4 LED15/CW 16W 220-240V D175	6500 K	93 lm/W	1,500 lm	Beam angle 110°
929003280417	DN020B G4 LED20/WW 20W 220-240V D200	3000 K	95 lm/W	1,900 lm	Beam angle 110°
929003280517	DN020B G4 LED20/NW 20W 220-240V D200	4000 K	100 lm/W	2,000 lm	Beam angle 110°
929003280617	DN020B G4 LED20/CW 20W 220-240V D200	6500 K	100 lm/W	2,000 lm	Beam angle 110°
929002671502	DN027B G3 LED6/WW 6W 220-240V D90 RU	3000 K	100.00 lm/W	600 lm	Beam angle 110°
929002671538	DN027B G3 LED6/WW 6W 220-240V D90 RD	3000 K	100.00 lm/W	600 lm	Beam angle 110°
929002671602	DN027B G3 LED6/NW 6W 220-240V D90 RU	4000 K	100.00 lm/W	600 lm	Beam angle 110°
929002671638	DN027B G3 LED6/NW 6W 220-240V D90 RD	4000 K	100.00 lm/W	600 lm	Beam angle 110°
929002671702	DN027B G3 LED6/CW 6W 220-240V D90 RU	6500 K	100.00 lm/W	600 lm	Beam angle 110°
929002671738	DN027B G3 LED6/CW 6W 220-240V D90 RD	6500 K	100.00 lm/W	600 lm	Beam angle 110°
929002672138	DN027B G3 LED6/WW 6W 220-240V D100 RD	3000 K	100.00 lm/W	600 lm	Beam angle 110°
929002672238	DN027B G3 LED6/NW 6W 220-240V D100 RD	4000 K	100.00 lm/W	600 lm	Beam angle 110°
929002672338	DN027B G3 LED6/CW 6W 220-240V D100 RD	6500 K	100.00 lm/W	600 lm	Beam angle 110°
929002672702	DN027B G3 LED9/WW 9W 220-240V D125 RU	3000 K	100.00 lm/W	900 lm	Beam angle 110°
929002672738	DN027B G3 LED9/WW 9W 220-240V D125 RD	3000 K	100.00 lm/W	900 lm	Beam angle 110°
929002672802	DN027B G3 LED9/NW 9W 220-240V D125 RU	4000 K	105.00 lm/W	950 lm	Beam angle 110°
929002672838	DN027B G3 LED9/NW 9W 220-240V D125 RD	4000 K	105.00 lm/W	950 lm	Beam angle 110°
929002672902	DN027B G3 LED9/CW 9W 220-240V D125 RU	6500 K	105.00 lm/W	950 lm	Beam angle 110°
929002672938	DN027B G3 LED9/CW 9W 220-240V D125 RD	6500 K	105.00 lm/W	950 lm	Beam angle 110°
929002673302	DN027B G3 LED12/WW 12W 220-240V D150 RU	3000 K	100.00 lm/W	1,200 lm	Beam angle 110°
929002673338	DN027B G3 LED12/WW 12W 220-240V D150 RD	3000 K	100.00 lm/W	1,200 lm	Beam angle 110°
929002673402	DN027B G3 LED12/NW 12W 220-240V D150 RU	4000 K	108.00 lm/W	1,300 lm	Beam angle 110°

Essential SmartBright LED Downlight

Order Code	Full Product Name	Correlated Color Temperature (Nom)	Luminous Efficacy (rated) (Nom)	Luminous Flux	Optic type
929002673438	DN027B G3 LED12/NW 12W 220-240V D150 RD	4000 K	108.00 lm/W	1,300 lm	Beam angle 110°
929002673502	DN027B G3 LED12/CW 12W 220-240V D150 RU	6500 K	108.00 lm/W	1,300 lm	Beam angle 110°
929002673538	DN027B G3 LED12/CW 12W 220-240V D150 RD	6500 K	108.00 lm/W	1,300 lm	Beam angle 110°
929002673938	DN027B G3 LED15/WW 15W 220-240 D175 RD	3000 K	100.00 lm/W	1,500 lm	Beam angle 110°
929002674002	DN027B G3 LED15/NW 15W 220V D175 RU	4000 K	106.00 lm/W	1,600 lm	Beam angle 110°
929002674038	DN027B G3 LED15/NW 15W 220-240 D175 RD	4000 K	106.00 lm/W	1,600 lm	Beam angle 110°
929002674102	DN027B G3 LED15/CW 15W 220V D175 RU	6500 K	106.00 lm/W	1,600 lm	Beam angle 110°
929002674138	DN027B G3 LED15/CW 15W 220-240 D175 RD	6500 K	106.00 lm/W	1,600 lm	Beam angle 110°
929002674538	DN027B G3 LED20/WW 19W 220-240V D200 RD	3000 K	105.00 lm/W	2,000 lm	Beam angle 110°
929002674602	DN027B G3 LED20/NW 19W 220-240V D200 RU	4000 K	110.00 lm/W	2,100 lm	Beam angle 110°
929002674638	DN027B G3 LED20/NW 19W 220-240V D200 RD	4000 K	110.00 lm/W	2,100 lm	Beam angle 110°
929002674702	DN027B G3 LED20/CW 19W 220-240V D200 RU	6500 K	110.00 lm/W	2,100 lm	Beam angle 110°
929002674738	DN027B G3 LED20/CW 19W 220-240V D200 RD	6500 K	110.00 lm/W	2,100 lm	Beam angle 110°
929002675738	DN027C G3 LED9/WW 9W 220-240V D150	3000 K	100.00 lm/W	900 lm	Beam angle 110°
929002675838	DN027C G3 LED9/NW 9W 220-240V D150	4000 K	105.00 lm/W	950 lm	Beam angle 110°
929002675938	DN027C G3 LED9/CW 9W 220-240V D150	6500 K	105.00 lm/W	950 lm	Beam angle 110°
929002676038	DN027C G3 LED12/WW 12W 220-240V D175	3000 K	100.00 lm/W	1,200 lm	Beam angle 110°
929002676138	DN027C G3 LED12/NW 12W 220-240V D175	4000 K	108.00 lm/W	1,300 lm	Beam angle 110°
929002676238	DN027C G3 LED12/CW 12W 220-240V D175	6500 K	108.00 lm/W	1,300 lm	Beam angle 110°
929002676338	DN027C G3 LED15/WW 15W 220-240V D200	3000 K	100.00 lm/W	1,500 lm	Beam angle 110°
929002676438	DN027C G3 LED15/NW 15W 220-240V D200	4000 K	106.00 lm/W	1,600 lm	Beam angle 110°
929002676538	DN027C G3 LED15/CW 15W 220-240V D200	6500 K	106.00 lm/W	1,600 lm	Beam angle 110°
929002676638	DN027C G3 LED20/WW 19W 220-240V D225	3000 K	105.00 lm/W	2,000 lm	Beam angle 110°
929002676738	DN027C G3 LED20/NW 19W 220-240V D225	4000 K	110.00 lm/W	2,100 lm	Beam angle 110°

Essential SmartBright LED Downlight

Order Code	Full Product Name	Correlated Color Temperature (Nom)	Luminous Efficacy (rated) (Nom)	Luminous Flux	Optic type
929002676838	DN027C G3 LED20/CW 19W 220-240V D225	6500 K	110.00 lm/W	2,100 lm	Beam angle 110°
929002677040	DN500B G3 LED6/NW 6W 220V D90 RD	4000 K	100.00 lm/W	600 lm	Beam angle 110°
929002677140	DN500B G3 LED6/CW 6W 220V D90 RD	6500 K	100.00 lm/W	600 lm	Beam angle 110°
929002677340	DN500B G3 LED9/NW 9W 220V D125 RD	4000 K	105.00 lm/W	950 lm	Beam angle 110°
929002677440	DN500B G3 LED9/CW 9W 220V D125 RD	6500 K	105.00 lm/W	950 lm	Beam angle 110°
929002677640	DN500B G3 LED12/NW 12W 220V D150 RD	4000 K	108.00 lm/W	1,300 lm	Beam angle 110°
929002677740	DN500B G3 LED12/CW 12W 220V D150 RD	6500 K	108.00 lm/W	1,300 lm	Beam angle 110°

Operating and Electrical

Order Code	Full Product Name	Line Frequency	Power Consumption	Suitable for random switching
929002508208	DN020B G3 LED3/WW 3.5W 220-240V D80 GM	50 or 60 Hz	3.5 W	-
929002508308	DN020B G3 LED3/NW 3.5W 220-240V D80 GM	50 or 60 Hz	3.5 W	-
929002508408	DN020B G3 LED3/CW 3.5W 220-240V D80 GM	50 or 60 Hz	3.5 W	-
929002508608	DN020B G3 LED4/NW 4.5W 220-240V D90 GM	50 or 60 Hz	4.5 W	-
929002509108	DN020B G3 LED6/WW 7W 220-240V D125 GM	50 or 60 Hz	7 W	-
929002509208	DN020B G3 LED6/NW 7W 220-240V D125 GM	50 or 60 Hz	7 W	-
929002509308	DN020B G3 LED6/CW 7W 220-240V D125 GM	50 or 60 Hz	7 W	-
929002509708	DN020B G3 LED9/WW 10.5W 220-240V D150 GM	50 or 60 Hz	10.5 W	-
929002509808	DN020B G3 LED9/NW 10.5W 220-240V D150 GM	50 or 60 Hz	10.5 W	-
929002509908	DN020B G3 LED9/CW 10.5W 220-240V D150 GM	50 or 60 Hz	10.5 W	-
929003269510	DN200 G3 LED3 830 3.5W D80 CN	50 or 60 Hz	3.5 W	Not applicable
929003269610	DN200 G3 LED3 840 3.5W D80 CN	50 or 60 Hz	3.5 W	Not applicable
929003269710	DN200 G3 LED3 865 3.5W D80 CN	50 or 60 Hz	3.5 W	Not applicable
929003269810	DN200 G3 LED4 830 4.5W D90 CN	50 or 60 Hz	4.5 W	Not applicable
929003269910	DN200 G3 LED4 840 4.5W D90 CN	50 or 60 Hz	4.5 W	Not applicable
929003270010	DN200 G3 LED4 865 4.5W D90 CN	50 or 60 Hz	4.5 W	Not applicable
929003270110	DN200 G3 LED6 830 6W D90 CN	50 or 60 Hz	6 W	Not applicable
929003270210	DN200 G3 LED6 840 6W D90 CN	50 or 60 Hz	6 W	Not applicable
929003270310	DN200 G3 LED6 865 6W D90 CN	50 or 60 Hz	6 W	Not applicable
929003270410	DN200 G3 LED6 830 7W D100 CN	50 or 60 Hz	7 W	Not applicable
929003270510	DN200 G3 LED6 840 7W D100 CN	50 or 60 Hz	7 W	Not applicable
929003270610	DN200 G3 LED6 865 7W D100 CN	50 or 60 Hz	7 W	Not applicable
929003270710	DN200 G3 LED6 830 6W D125 CN	50 or 60 Hz	6 W	Not applicable
929003270810	DN200 G3 LED6 840 6W D125 CN	50 or 60 Hz	6 W	Not applicable
929003270910	DN200 G3 LED6 865 6W D125 CN	50 or 60 Hz	6 W	Not applicable

Essential SmartBright LED Downlight

Order Code	Full Product Name	Line Frequency	Power Consumption	Suitable for random switching
929003271010	DN200 G3 LED9 830 10.5W D125 CN	50 or 60 Hz	10.5 W	Not applicable
929003271110	DN200 G3 LED9 840 10.5W D125 CN	50 or 60 Hz	10.5 W	Not applicable
929003271210	DN200 G3 LED9 865 10.5W D125 CN	50 or 60 Hz	10.5 W	Not applicable
929003271310	DN200 G3 LED9 830 9W D150 CN	50 or 60 Hz	9 W	Not applicable
929003271410	DN200 G3 LED9 840 9W D150 CN	50 or 60 Hz	9 W	Not applicable
929003271510	DN200 G3 LED9 865 9W D150 CN	50 or 60 Hz	9 W	Not applicable
929003271610	DN200 G3 LED12 830 13W D150 CN	50 or 60 Hz	13 W	Not applicable
929003271710	DN200 G3 LED12 840 13W D150 CN	50 or 60 Hz	13 W	Not applicable
929003271810	DN200 G3 LED12 865 13W D150 CN	50 or 60 Hz	13 W	Not applicable
929003271910	DN200 G3 LED15 830 16W D175 CN	50 or 60 Hz	16 W	Not applicable
929003272010	DN200 G3 LED15 840 16W D175 CN	50 or 60 Hz	16 W	Not applicable
929003272110	DN200 G3 LED15 865 16W D175 CN	50 or 60 Hz	16 W	Not applicable
929003272210	DN200 G3 LED20 830 20W D200 CN	50 or 60 Hz	20 W	Not applicable
929003272310	DN200 G3 LED20 840 20W D200 CN	50 or 60 Hz	20 W	Not applicable
929003272410	DN200 G3 LED20 865 20W D200 CN	50 or 60 Hz	20 W	Not applicable
929002674838	DN027B G3 LED6/WW 6W 220-240V L100 SQ	50 or 60 Hz	6 W	No
929002674902	DN027B G3 LED6/NW 6W 220-240V L100 RU	50 or 60 Hz	6 W	No
929002674938	DN027B G3 LED6/NW 6W 220-240V L100 SQ	50 or 60 Hz	6 W	No
929002675002	DN027B G3 LED6/CW 6W 220-240V L100 RU	50 or 60 Hz	6 W	No
929002675038	DN027B G3 LED6/CW 6W 220-240V L100 SQ	50 or 60 Hz	6 W	No
929002675138	DN027B G3 LED9/WW 9W 220-240V L125 SQ	50 or 60 Hz	9 W	No
929002675202	DN027B G3 LED9/NW 9W 220-240V L125 RU	50 or 60 Hz	9 W	No
929002675238	DN027B G3 LED9/NW 9W 220-240V L125 SQ	50 or 60 Hz	9 W	No
929002675302	DN027B G3 LED9/CW 9W 220-240V L125 RU	50 or 60 Hz	9 W	No
929002675338	DN027B G3 LED9/CW 9W 220-240V L125 SQ	50 or 60 Hz	9 W	No
929002675438	DN027B G3 LED12/WW 12W 220-240V L150 SQ	50 or 60 Hz	12 W	No
929002675502	DN027B G3 LED12/NW 12W 220-240V L150 RU	50 or 60 Hz	12 W	No
929002675538	DN027B G3 LED12/NW 12W 220-240V L150 SQ	50 or 60 Hz	12 W	No
929002675602	DN027B G3 LED12/CW 12W 220-240V L150 RU	50 or 60 Hz	12 W	No
929002675638	DN027B G3 LED12/CW 12W 220-240V L150 SQ	50 or 60 Hz	12 W	No
929003277708	DN020B G4 LED3/WW 3.5W 220-240V D80	-	3.5 W	Not applicable
929003277808	DN020B G4 LED3/NW 3.5W 220-240V D80	-	3.5 W	Not applicable
929003277908	DN020B G4 LED3/CW 3.5W 220-240V D80	-	3.5 W	Not applicable
929003278017	DN020B G4 LED4/WW 4.5W 220-240V D90	-	4.5 W	Not applicable
929003278117	DN020B G4 LED4/NW 4.5W 220-240V D90	-	4.5 W	Not applicable
929003278217	DN020B G4 LED4/CW 4.5W 220-240V D90	-	4.5 W	Not applicable
929003278317	DN020B G4 LED6/WW 6W 220-240V D90	-	6 W	Not applicable

Essential SmartBright LED Downlight

Order Code	Full Product Name	Line Frequency	Power Consumption	Suitable for random switching
929003278417	DN020B G4 LED6/NW 6W 220-240V D90	-	6 W	Not applicable
929003278517	DN020B G4 LED6/CW 6W 220-240V D90	-	6 W	Not applicable
929003278608	DN020B G4 LED6/WW 7W 220-240V D100	-	7 W	Not applicable
929003278708	DN020B G4 LED6/NW 7W 220-240V D100	-	7 W	Not applicable
929003278808	DN020B G4 LED6/CW 7W 220-240V D100	-	7 W	Not applicable
929003278908	DN020B G4 LED6/WW 6W 220-240V D125	-	6 W	Not applicable
929003279008	DN020B G4 LED6/NW 6W 220-240V D125	-	6 W	Not applicable
929003279108	DN020B G4 LED6/CW 6W 220-240V D125	-	6 W	Not applicable
929003279217	DN020B G4 LED9/WW 10.5W 220-240V D125	-	10.5 W	Not applicable
929003279317	DN020B G4 LED9/NW 10.5W 220-240V D125	-	10.5 W	Not applicable
929003279417	DN020B G4 LED9/CW 10.5W 220-240V D125	-	10.5 W	Not applicable
929003279508	DN020B G4 LED9/WW 9W 220-240V D150	-	9 W	Not applicable
929003279608	DN020B G4 LED9/NW 9W 220-240V D150	-	9 W	Not applicable
929003279708	DN020B G4 LED9/CW 9W 220-240V D150	-	9 W	Not applicable
929003279817	DN020B G4 LED12/WW 13W 220-240V D150	-	13 W	Not applicable
929003279917	DN020B G4 LED12/NW 13W 220-240V D150	-	13 W	Not applicable
929003280017	DN020B G4 LED12/CW 13W 220-240V D150	-	13 W	Not applicable
929003280117	DN020B G4 LED15/WW 16W 220-240V D175	-	16 W	Not applicable
929003280217	DN020B G4 LED15/NW 16W 220-240V D175	-	16 W	Not applicable
929003280317	DN020B G4 LED15/CW 16W 220-240V D175	-	16 W	Not applicable
929003280417	DN020B G4 LED20/WW 20W 220-240V D200	-	20 W	Not applicable
929003280517	DN020B G4 LED20/NW 20W 220-240V D200	-	20 W	Not applicable
929003280617	DN020B G4 LED20/CW 20W 220-240V D200	-	20 W	Not applicable
929002671502	DN027B G3 LED6/WW 6W 220-240V D90 RU	50 or 60 Hz	6 W	No
929002671538	DN027B G3 LED6/WW 6W 220-240V D90 RD	50 or 60 Hz	6 W	No
929002671602	DN027B G3 LED6/NW 6W 220-240V D90 RU	50 or 60 Hz	6 W	No
929002671638	DN027B G3 LED6/NW 6W 220-240V D90 RD	50 or 60 Hz	6 W	No
929002671702	DN027B G3 LED6/CW 6W 220-240V D90 RU	50 or 60 Hz	6 W	No
929002671738	DN027B G3 LED6/CW 6W 220-240V D90 RD	50 or 60 Hz	6 W	No
929002672138	DN027B G3 LED6/WW 6W 220-240V D100 RD	50 or 60 Hz	6 W	No
929002672238	DN027B G3 LED6/NW 6W 220-240V D100 RD	50 or 60 Hz	6 W	No
929002672338	DN027B G3 LED6/CW 6W 220-240V D100 RD	50 or 60 Hz	6 W	No

Essential SmartBright LED Downlight

Order Code	Full Product Name	Line Frequency	Power Consumption	Suitable for random switching
929002672702	DN027B G3 LED9/WW 9W 220-240V D125 RU	50 or 60 Hz	9 W	No
929002672738	DN027B G3 LED9/WW 9W 220-240V D125 RD	50 or 60 Hz	9 W	No
929002672802	DN027B G3 LED9/NW 9W 220-240V D125 RU	50 or 60 Hz	9 W	No
929002672838	DN027B G3 LED9/NW 9W 220-240V D125 RD	50 or 60 Hz	9 W	No
929002672902	DN027B G3 LED9/CW 9W 220-240V D125 RU	50 or 60 Hz	9 W	No
929002672938	DN027B G3 LED9/CW 9W 220-240V D125 RD	50 or 60 Hz	9 W	No
929002673302	DN027B G3 LED12/WW 12W 220-240V D150 RU	50 or 60 Hz	12 W	No
929002673338	DN027B G3 LED12/WW 12W 220-240V D150 RD	50 or 60 Hz	12 W	No
929002673402	DN027B G3 LED12/NW 12W 220-240V D150 RU	50 or 60 Hz	12 W	No
929002673438	DN027B G3 LED12/NW 12W 220-240V D150 RD	50 or 60 Hz	12 W	No
929002673502	DN027B G3 LED12/CW 12W 220-240V D150 RU	50 or 60 Hz	12 W	No
929002673538	DN027B G3 LED12/CW 12W 220-240V D150 RD	50 or 60 Hz	12 W	No
929002673938	DN027B G3 LED15/WW 15W 220-240 D175 RD	50 or 60 Hz	15 W	No
929002674002	DN027B G3 LED15/NW 15W 220V D175 RU	50 or 60 Hz	15 W	No
929002674038	DN027B G3 LED15/NW 15W 220-240 D175 RD	50 or 60 Hz	15 W	No
929002674102	DN027B G3 LED15/CW 15W 220V D175 RU	50 or 60 Hz	15 W	No
929002674138	DN027B G3 LED15/CW 15W 220-240 D175 RD	50 or 60 Hz	15 W	No
929002674538	DN027B G3 LED20/WW 19W 220-240V D200 RD	50 or 60 Hz	19 W	No
929002674602	DN027B G3 LED20/NW 19W 220-240V D200 RU	50 or 60 Hz	19 W	No
929002674638	DN027B G3 LED20/NW 19W 220-240V D200 RD	50 or 60 Hz	19 W	No
929002674702	DN027B G3 LED20/CW 19W 220-240V D200 RU	50 or 60 Hz	19 W	No
929002674738	DN027B G3 LED20/CW 19W 220-240V D200 RD	50 or 60 Hz	19 W	No
929002675738	DN027C G3 LED9/WW 9W 220-240V D150	50 or 60 Hz	9 W	No
929002675838	DN027C G3 LED9/NW 9W 220-240V D150	50 or 60 Hz	9 W	No
929002675938	DN027C G3 LED9/CW 9W 220-240V D150	50 or 60 Hz	9 W	No
929002676038	DN027C G3 LED12/WW 12W 220-240V D175	50 or 60 Hz	12 W	No
929002676138	DN027C G3 LED12/NW 12W 220-240V D175	50 or 60 Hz	12 W	No
929002676238	DN027C G3 LED12/CW 12W 220-240V D175	50 or 60 Hz	12 W	No
929002676338	DN027C G3 LED15/WW 15W 220-240V D200	50 or 60 Hz	15 W	No
929002676438	DN027C G3 LED15/NW 15W 220-240V D200	50 or 60 Hz	15 W	No
929002676538	DN027C G3 LED15/CW 15W 220-240V D200	50 or 60 Hz	15 W	No
929002676638	DN027C G3 LED20/WW 19W 220-240V D225	50 or 60 Hz	19 W	No

Essential SmartBright LED Downlight

Order Code	Full Product Name	Line Frequency	Power Consumption	Suitable for random switching
929002676738	DN027C G3 LED20/NW 19W 220-240V D225	50 or 60 Hz	19 W	No
929002676838	DN027C G3 LED20/CW 19W 220-240V D225	50 or 60 Hz	19 W	No
929002677040	DN500B G3 LED6/NW 6W 220V D90 RD	50 or 60 Hz	6 W	No
929002677140	DN500B G3 LED6/CW 6W 220V D90 RD	50 or 60 Hz	6 W	No
929002677340	DN500B G3 LED9/NW 9W 220V D125 RD	50 or 60 Hz	9 W	No
929002677440	DN500B G3 LED9/CW 9W 220V D125 RD	50 or 60 Hz	9 W	No
929002677640	DN500B G3 LED12/NW 12W 220V D150 RD	50 or 60 Hz	12 W	No
929002677740	DN500B G3 LED12/CW 12W 220V D150 RD	50 or 60 Hz	12 W	No

Mechanical and Housing

Order Code	Full Product Name	Ingress protection code
929002508208	DN020B G3 LED3/WW 3.5W 220-240V D80 GM	IP20
929002508308	DN020B G3 LED3/NW 3.5W 220-240V D80 GM	IP20
929002508408	DN020B G3 LED3/CW 3.5W 220-240V D80 GM	IP20
929002508608	DN020B G3 LED4/NW 4.5W 220-240V D90 GM	IP20
929002509108	DN020B G3 LED6/WW 7W 220-240V D125 GM	IP20
929002509208	DN020B G3 LED6/NW 7W 220-240V D125 GM	IP20
929002509308	DN020B G3 LED6/CW 7W 220-240V D125 GM	IP20
929002509708	DN020B G3 LED9/WW 10.5W 220-240V D150 GM	IP20
929002509808	DN020B G3 LED9/NW 10.5W 220-240V D150 GM	IP20
929002509908	DN020B G3 LED9/CW 10.5W 220-240V D150 GM	IP20
929003269510	DN200 G3 LED3 830 3.5W D80 CN	IP20
929003269610	DN200 G3 LED3 840 3.5W D80 CN	IP20
929003269710	DN200 G3 LED3 865 3.5W D80 CN	IP20
929003269810	DN200 G3 LED4 830 4.5W D90 CN	IP20
929003269910	DN200 G3 LED4 840 4.5W D90 CN	IP20
929003270010	DN200 G3 LED4 865 4.5W D90 CN	IP20
929003270110	DN200 G3 LED6 830 6W D90 CN	IP20
929003270210	DN200 G3 LED6 840 6W D90 CN	IP20
929003270310	DN200 G3 LED6 865 6W D90 CN	IP20
929003270410	DN200 G3 LED6 830 7W D100 CN	IP20
929003270510	DN200 G3 LED6 840 7W D100 CN	IP20
929003270610	DN200 G3 LED6 865 7W D100 CN	IP20
929003270710	DN200 G3 LED6 830 6W D125 CN	IP20
929003270810	DN200 G3 LED6 840 6W D125 CN	IP20
929003270910	DN200 G3 LED6 865 6W D125 CN	IP20
929003271010	DN200 G3 LED9 830 10.5W D125 CN	IP20
929003271110	DN200 G3 LED9 840 10.5W D125 CN	IP20
929003271210	DN200 G3 LED9 865 10.5W D125 CN	IP20
929003271310	DN200 G3 LED9 830 9W D150 CN	IP20
929003271410	DN200 G3 LED9 840 9W D150 CN	IP20
929003271510	DN200 G3 LED9 865 9W D150 CN	IP20
929003271610	DN200 G3 LED12 830 13W D150 CN	IP20
929003271710	DN200 G3 LED12 840 13W D150 CN	IP20
929003271810	DN200 G3 LED12 865 13W D150 CN	IP20
929003271910	DN200 G3 LED15 830 16W D175 CN	IP20
929003272010	DN200 G3 LED15 840 16W D175 CN	IP20
929003272110	DN200 G3 LED15 865 16W D175 CN	IP20
929003272210	DN200 G3 LED20 830 20W D200 CN	IP20
929003272310	DN200 G3 LED20 840 20W D200 CN	IP20
929003272410	DN200 G3 LED20 865 20W D200 CN	IP20
929002674838	DN027B G3 LED6/WW 6W 220-240V L100 SQ	IP20/40
929002674902	DN027B G3 LED6/NW 6W 220-240V L100 RU	IP20/40
929002674938	DN027B G3 LED6/NW 6W 220-240V L100 SQ	IP20/40
929002675002	DN027B G3 LED6/CW 6W 220-240V L100 RU	IP20/40
929002675038	DN027B G3 LED6/CW 6W 220-240V L100 SQ	IP20/40
929002675138	DN027B G3 LED9/WW 9W 220-240V L125 SQ	IP20/40
929002675202	DN027B G3 LED9/NW 9W 220-240V L125 RU	IP20/40
929002675238	DN027B G3 LED9/NW 9W 220-240V L125 SQ	IP20/40
929002675302	DN027B G3 LED9/CW 9W 220-240V L125 RU	IP20/40
929002675338	DN027B G3 LED9/CW 9W 220-240V L125 SQ	IP20/40
929002675438	DN027B G3 LED12/WW 12W 220-240V L150 SQ	IP20/40
929002675502	DN027B G3 LED12/NW 12W 220-240V L150 RU	IP20/40
929002675538	DN027B G3 LED12/NW 12W 220-240V L150 SQ	IP20/40
929002675602	DN027B G3 LED12/CW 12W 220-240V L150 RU	IP20/40
929002675638	DN027B G3 LED12/CW 12W 220-240V L150 SQ	IP20/40
929003277708	DN020B G4 LED3/WW 3.5W 220-240V D80	IP20
929003277808	DN020B G4 LED3/NW 3.5W 220-240V D80	IP20
929003277908	DN020B G4 LED3/CW 3.5W 220-240V D80	IP20
929003278017	DN020B G4 LED4/WW 4.5W 220-240V D90	IP20
929003278117	DN020B G4 LED4/NW 4.5W 220-240V D90	IP20
929003278217	DN020B G4 LED4/CW 4.5W 220-240V D90	IP20
929003278317	DN020B G4 LED6/WW 6W 220-240V D90	IP20
929003278417	DN020B G4 LED6/NW 6W 220-240V D90	IP20
929003278517	DN020B G4 LED6/CW 6W 220-240V D90	IP20
929003278608	DN020B G4 LED6/WW 7W 220-240V D100	IP20
929003278708	DN020B G4 LED6/NW 7W 220-240V D100	IP20

Order Code	Full Product Name	Ingress protection code
929003278808	DN020B G4 LED6/CW 7W 220-240V D100	IP20
929003278908	DN020B G4 LED6/WW 6W 220-240V D125	IP20
929003279008	DN020B G4 LED6/NW 6W 220-240V D125	IP20
929003279108	DN020B G4 LED6/CW 6W 220-240V D125	IP20
929003279217	DN020B G4 LED9/WW 10.5W 220-240V D125	IP20
929003279317	DN020B G4 LED9/NW 10.5W 220-240V D125	IP20
929003279417	DN020B G4 LED9/CW 10.5W 220-240V D125	IP20
929003279508	DN020B G4 LED9/WW 9W 220-240V D150	IP20
929003279608	DN020B G4 LED9/NW 9W 220-240V D150	IP20
929003279708	DN020B G4 LED9/CW 9W 220-240V D150	IP20
929003279817	DN020B G4 LED12/WW 13W 220-240V D150	IP20
929003279917	DN020B G4 LED12/NW 13W 220-240V D150	IP20
929003280017	DN020B G4 LED12/CW 13W 220-240V D150	IP20
929003280117	DN020B G4 LED15/WW 16W 220-240V D175	IP20
929003280217	DN020B G4 LED15/NW 16W 220-240V D175	IP20
929003280317	DN020B G4 LED15/CW 16W 220-240V D175	IP20
929003280417	DN020B G4 LED20/WW 20W 220-240V D200	IP20
929003280517	DN020B G4 LED20/NW 20W 220-240V D200	IP20
929003280617	DN020B G4 LED20/CW 20W 220-240V D200	IP20
929002671502	DN027B G3 LED6/WW 6W 220-240V D90 RU	IP20/40
929002671538	DN027B G3 LED6/WW 6W 220-240V D90 RD	IP20/40
929002671602	DN027B G3 LED6/NW 6W 220-240V D90 RU	IP20/40
929002671638	DN027B G3 LED6/NW 6W 220-240V D90 RD	IP20/40
929002671702	DN027B G3 LED6/CW 6W 220-240V D90 RU	IP20/40
929002671738	DN027B G3 LED6/CW 6W 220-240V D90 RD	IP20/40
929002672138	DN027B G3 LED6/WW 6W 220-240V D100 RD	IP20/40
929002672238	DN027B G3 LED6/NW 6W 220-240V D100 RD	IP20/40
929002672338	DN027B G3 LED6/CW 6W 220-240V D100 RD	IP20/40
929002672702	DN027B G3 LED9/WW 9W 220-240V D125 RU	IP20/40
929002672738	DN027B G3 LED9/WW 9W 220-240V D125 RD	IP20/40
929002672802	DN027B G3 LED9/NW 9W 220-240V D125 RU	IP20/40
929002672838	DN027B G3 LED9/NW 9W 220-240V D125 RD	IP20/40
929002672902	DN027B G3 LED9/CW 9W 220-240V D125 RU	IP20/40
929002672938	DN027B G3 LED9/CW 9W 220-240V D125 RD	IP20/40

Order Code	Full Product Name	Ingress protection code
929002673302	DN027B G3 LED12/WW 12W 220-240V D150 RU	IP20/40
929002673338	DN027B G3 LED12/WW 12W 220-240V D150 RD	IP20/40
929002673402	DN027B G3 LED12/NW 12W 220-240V D150 RU	IP20/40
929002673438	DN027B G3 LED12/NW 12W 220-240V D150 RD	IP20/40
929002673502	DN027B G3 LED12/CW 12W 220-240V D150 RU	IP20/40
929002673538	DN027B G3 LED12/CW 12W 220-240V D150 RD	IP20/40
929002673938	DN027B G3 LED15/WW 15W 220-240 D175 RD	IP20/40
929002674002	DN027B G3 LED15/NW 15W 220V D175 RU	IP20/40
929002674038	DN027B G3 LED15/NW 15W 220-240 D175 RD	IP20/40
929002674102	DN027B G3 LED15/CW 15W 220V D175 RU	IP20/40
929002674138	DN027B G3 LED15/CW 15W 220-240 D175 RD	IP20/40
929002674538	DN027B G3 LED20/WW 19W 220-240V D200 RD	IP20/40
929002674602	DN027B G3 LED20/NW 19W 220-240V D200 RU	IP20/40
929002674638	DN027B G3 LED20/NW 19W 220-240V D200 RD	IP20/40
929002674702	DN027B G3 LED20/CW 19W 220-240V D200 RU	IP20/40
929002674738	DN027B G3 LED20/CW 19W 220-240V D200 RD	IP20/40
929002675738	DN027C G3 LED9/WW 9W 220-240V D150	IP20/40
929002675838	DN027C G3 LED9/NW 9W 220-240V D150	IP20/40
929002675938	DN027C G3 LED9/CW 9W 220-240V D150	IP20/40
929002676038	DN027C G3 LED12/WW 12W 220-240V D175	IP20/40
929002676138	DN027C G3 LED12/NW 12W 220-240V D175	IP20/40
929002676238	DN027C G3 LED12/CW 12W 220-240V D175	IP20/40
929002676338	DN027C G3 LED15/WW 15W 220-240V D200	IP20/40
929002676438	DN027C G3 LED15/NW 15W 220-240V D200	IP20/40
929002676538	DN027C G3 LED15/CW 15W 220-240V D200	IP20/40
929002676638	DN027C G3 LED20/WW 19W 220-240V D225	IP20/40
929002676738	DN027C G3 LED20/NW 19W 220-240V D225	IP20/40
929002676838	DN027C G3 LED20/CW 19W 220-240V D225	IP20/40
929002677040	DN500B G3 LED6/NW 6W 220V D90 RD	IP20/40
929002677140	DN500B G3 LED6/CW 6W 220V D90 RD	IP20/40
929002677340	DN500B G3 LED9/NW 9W 220V D125 RD	IP20/40
929002677440	DN500B G3 LED9/CW 9W 220V D125 RD	IP20/40
929002677640	DN500B G3 LED12/NW 12W 220V D150 RD	IP20/40
929002677740	DN500B G3 LED12/CW 12W 220V D150 RD	IP20/40

Approval and Application

Order Code	Full Product Name	Ambient temperature range	Flammability mark	Glow-wire test
929002508208	DN020B G3 LED3/WW 3.5W 220-240V D80 GM	-20 to +40 °C	-	-
929002508308	DN020B G3 LED3/NW 3.5W 220-240V D80 GM	-20 to +40 °C	-	-
929002508408	DN020B G3 LED3/CW 3.5W 220-240V D80 GM	-20 to +40 °C	-	-
929002508608	DN020B G3 LED4/NW 4.5W 220-240V D90 GM	-20 to +40 °C	-	-
929002509108	DN020B G3 LED6/WW 7W 220-240V D125 GM	-20 to +40 °C	-	-

Essential SmartBright LED Downlight

Order Code	Full Product Name	Ambient temperature range	Flammability mark	Glow-wire test
929002509208	DN020B G3 LED6/NW 7W 220-240V D125 GM	-20 to +40 °C	-	-
929002509308	DN020B G3 LED6/CW 7W 220-240V D125 GM	-20 to +40 °C	-	-
929002509708	DN020B G3 LED9/WW 10.5W 220-240V D150 GM	-20 to +40 °C	-	-
929002509808	DN020B G3 LED9/NW 10.5W 220-240V D150 GM	-20 to +40 °C	-	-
929002509908	DN020B G3 LED9/CW 10.5W 220-240V D150 GM	-20 to +40 °C	-	-
929003269510	DN200 G3 LED3 830 3.5W D80 CN	-20 to +40 °C	For mounting on normally flammable surfaces	Temperature 650 °C, duration 30 s
929003269610	DN200 G3 LED3 840 3.5W D80 CN	-20 to +40 °C	For mounting on normally flammable surfaces	Temperature 650 °C, duration 30 s
929003269710	DN200 G3 LED3 865 3.5W D80 CN	-20 to +40 °C	For mounting on normally flammable surfaces	Temperature 650 °C, duration 30 s
929003269810	DN200 G3 LED4 830 4.5W D90 CN	-20 to +40 °C	For mounting on normally flammable surfaces	Temperature 650 °C, duration 30 s
929003269910	DN200 G3 LED4 840 4.5W D90 CN	-20 to +40 °C	For mounting on normally flammable surfaces	Temperature 650 °C, duration 30 s
929003270010	DN200 G3 LED4 865 4.5W D90 CN	-20 to +40 °C	For mounting on normally flammable surfaces	Temperature 650 °C, duration 30 s
929003270110	DN200 G3 LED6 830 6W D90 CN	-20 to +40 °C	For mounting on normally flammable surfaces	Temperature 650 °C, duration 30 s
929003270210	DN200 G3 LED6 840 6W D90 CN	-20 to +40 °C	For mounting on normally flammable surfaces	Temperature 650 °C, duration 30 s
929003270310	DN200 G3 LED6 865 6W D90 CN	-20 to +40 °C	For mounting on normally flammable surfaces	Temperature 650 °C, duration 30 s
929003270410	DN200 G3 LED6 830 7W D100 CN	-20 to +40 °C	For mounting on normally flammable surfaces	Temperature 650 °C, duration 30 s
929003270510	DN200 G3 LED6 840 7W D100 CN	-20 to +40 °C	For mounting on normally flammable surfaces	Temperature 650 °C, duration 30 s
929003270610	DN200 G3 LED6 865 7W D100 CN	-20 to +40 °C	For mounting on normally flammable surfaces	Temperature 650 °C, duration 30 s
929003270710	DN200 G3 LED6 830 6W D125 CN	-20 to +40 °C	For mounting on normally flammable surfaces	Temperature 650 °C, duration 30 s
929003270810	DN200 G3 LED6 840 6W D125 CN	-20 to +40 °C	For mounting on normally flammable surfaces	Temperature 650 °C, duration 30 s
929003270910	DN200 G3 LED6 865 6W D125 CN	-20 to +40 °C	For mounting on normally flammable surfaces	Temperature 650 °C, duration 30 s
929003271010	DN200 G3 LED9 830 10.5W D125 CN	-20 to +40 °C	For mounting on normally flammable surfaces	Temperature 650 °C, duration 30 s
929003271110	DN200 G3 LED9 840 10.5W D125 CN	-20 to +40 °C	For mounting on normally flammable surfaces	Temperature 650 °C, duration 30 s
929003271210	DN200 G3 LED9 865 10.5W D125 CN	-20 to +40 °C	For mounting on normally flammable surfaces	Temperature 650 °C, duration 30 s
929003271310	DN200 G3 LED9 830 9W D150 CN	-20 to +40 °C	For mounting on normally flammable surfaces	Temperature 650 °C, duration 30 s

Essential SmartBright LED Downlight

Order Code	Full Product Name	Ambient temperature range	Flammability mark	Glow-wire test
929003271410	DN200 G3 LED9 840 9W D150 CN	-20 to +40 °C	For mounting on normally flammable surfaces	Temperature 650 °C, duration 30 s
929003271510	DN200 G3 LED9 865 9W D150 CN	-20 to +40 °C	For mounting on normally flammable surfaces	Temperature 650 °C, duration 30 s
929003271610	DN200 G3 LED12 830 13W D150 CN	-20 to +40 °C	For mounting on normally flammable surfaces	Temperature 650 °C, duration 30 s
929003271710	DN200 G3 LED12 840 13W D150 CN	-20 to +40 °C	For mounting on normally flammable surfaces	Temperature 650 °C, duration 30 s
929003271810	DN200 G3 LED12 865 13W D150 CN	-20 to +40 °C	For mounting on normally flammable surfaces	Temperature 650 °C, duration 30 s
929003271910	DN200 G3 LED15 830 16W D175 CN	-20 to +40 °C	For mounting on normally flammable surfaces	Temperature 650 °C, duration 30 s
929003272010	DN200 G3 LED15 840 16W D175 CN	-20 to +40 °C	For mounting on normally flammable surfaces	Temperature 650 °C, duration 30 s
929003272110	DN200 G3 LED15 865 16W D175 CN	-20 to +40 °C	For mounting on normally flammable surfaces	Temperature 650 °C, duration 30 s
929003272210	DN200 G3 LED20 830 20W D200 CN	-20 to +40 °C	For mounting on normally flammable surfaces	Temperature 650 °C, duration 30 s
929003272310	DN200 G3 LED20 840 20W D200 CN	-20 to +40 °C	For mounting on normally flammable surfaces	Temperature 650 °C, duration 30 s
929003272410	DN200 G3 LED20 865 20W D200 CN	-20 to +40 °C	For mounting on normally flammable surfaces	Temperature 650 °C, duration 30 s
929002674838	DN027B G3 LED6/WW 6W 220-240V L100 SQ	-20 to +40 °C	For mounting on normally flammable surfaces	Temperature 650 °C, duration 30 s
929002674902	DN027B G3 LED6/NW 6W 220-240V L100 RU	-20 to +40 °C	For mounting on normally flammable surfaces	Temperature 650 °C, duration 30 s
929002674938	DN027B G3 LED6/NW 6W 220-240V L100 SQ	-20 to +40 °C	For mounting on normally flammable surfaces	Temperature 650 °C, duration 30 s
929002675002	DN027B G3 LED6/CW 6W 220-240V L100 RU	-20 to +40 °C	For mounting on normally flammable surfaces	Temperature 650 °C, duration 30 s
929002675038	DN027B G3 LED6/CW 6W 220-240V L100 SQ	-20 to +40 °C	For mounting on normally flammable surfaces	Temperature 650 °C, duration 30 s
929002675138	DN027B G3 LED9/WW 9W 220-240V L125 SQ	-20 to +40 °C	For mounting on normally flammable surfaces	Temperature 650 °C, duration 30 s
929002675202	DN027B G3 LED9/NW 9W 220-240V L125 RU	-20 to +40 °C	For mounting on normally flammable surfaces	Temperature 650 °C, duration 30 s
929002675238	DN027B G3 LED9/NW 9W 220-240V L125 SQ	-20 to +40 °C	For mounting on normally flammable surfaces	Temperature 650 °C, duration 30 s
929002675302	DN027B G3 LED9/CW 9W 220-240V L125 RU	-20 to +40 °C	For mounting on normally flammable surfaces	Temperature 650 °C, duration 30 s
929002675338	DN027B G3 LED9/CW 9W 220-240V L125 SQ	-20 to +40 °C	For mounting on normally flammable surfaces	Temperature 650 °C, duration 30 s
929002675438	DN027B G3 LED12/WW 12W 220-240V L150 SQ	-20 to +40 °C	For mounting on normally flammable surfaces	Temperature 650 °C, duration 30 s
929002675502	DN027B G3 LED12/NW 12W 220-240V L150 RU	-20 to +40 °C	For mounting on normally flammable surfaces	Temperature 650 °C, duration 30 s
929002675538	DN027B G3 LED12/NW 12W 220-240V L150 SQ	-20 to +40 °C	For mounting on normally flammable surfaces	Temperature 650 °C, duration 30 s

Essential SmartBright LED Downlight

Order Code	Full Product Name	Ambient temperature range	Flammability mark	Glow-wire test
929002675602	DN027B G3 LED12/CW 12W 220-240V L150 RU	-20 to +40 °C	For mounting on normally flammable surfaces	Temperature 650 °C, duration 30 s
929002675638	DN027B G3 LED12/CW 12W 220-240V L150 SQ	-20 to +40 °C	For mounting on normally flammable surfaces	Temperature 650 °C, duration 30 s
929003277708	DN020B G4 LED3/WW 3.5W 220-240V D80	-20 °C to 40 °C	For mounting on normally flammable surfaces	Temperature 650 °C, duration 30 s
929003277808	DN020B G4 LED3/NW 3.5W 220-240V D80	-20 °C to 40 °C	For mounting on normally flammable surfaces	Temperature 650 °C, duration 30 s
929003277908	DN020B G4 LED3/CW 3.5W 220-240V D80	-20 °C to 40 °C	For mounting on normally flammable surfaces	Temperature 650 °C, duration 30 s
929003278017	DN020B G4 LED4/WW 4.5W 220-240V D90	-20 °C to 40 °C	For mounting on normally flammable surfaces	Temperature 650 °C, duration 30 s
929003278117	DN020B G4 LED4/NW 4.5W 220-240V D90	-20 °C to 40 °C	For mounting on normally flammable surfaces	Temperature 650 °C, duration 30 s
929003278217	DN020B G4 LED4/CW 4.5W 220-240V D90	-20 °C to 40 °C	For mounting on normally flammable surfaces	Temperature 650 °C, duration 30 s
929003278317	DN020B G4 LED6/WW 6W 220-240V D90	-20 °C to 40 °C	For mounting on normally flammable surfaces	Temperature 650 °C, duration 30 s
929003278417	DN020B G4 LED6/NW 6W 220-240V D90	-20 °C to 40 °C	For mounting on normally flammable surfaces	Temperature 650 °C, duration 30 s
929003278517	DN020B G4 LED6/CW 6W 220-240V D90	-20 °C to 40 °C	For mounting on normally flammable surfaces	Temperature 650 °C, duration 30 s
929003278608	DN020B G4 LED6/WW 7W 220-240V D100	-20 °C to 40 °C	For mounting on normally flammable surfaces	Temperature 650 °C, duration 30 s
929003278708	DN020B G4 LED6/NW 7W 220-240V D100	-20 °C to 40 °C	For mounting on normally flammable surfaces	Temperature 650 °C, duration 30 s
929003278808	DN020B G4 LED6/CW 7W 220-240V D100	-20 °C to 40 °C	For mounting on normally flammable surfaces	Temperature 650 °C, duration 30 s
929003278908	DN020B G4 LED6/WW 6W 220-240V D125	-20 °C to 40 °C	For mounting on normally flammable surfaces	Temperature 650 °C, duration 30 s
929003279008	DN020B G4 LED6/NW 6W 220-240V D125	-20 °C to 40 °C	For mounting on normally flammable surfaces	Temperature 650 °C, duration 30 s
929003279108	DN020B G4 LED6/CW 6W 220-240V D125	-20 °C to 40 °C	For mounting on normally flammable surfaces	Temperature 650 °C, duration 30 s
929003279217	DN020B G4 LED9/WW 10.5W 220-240V D125	-20 °C to 40 °C	For mounting on normally flammable surfaces	Temperature 650 °C, duration 30 s
929003279317	DN020B G4 LED9/NW 10.5W 220-240V D125	-20 °C to 40 °C	For mounting on normally flammable surfaces	Temperature 650 °C, duration 30 s
929003279417	DN020B G4 LED9/CW 10.5W 220-240V D125	-20 °C to 40 °C	For mounting on normally flammable surfaces	Temperature 650 °C, duration 30 s
929003279508	DN020B G4 LED9/WW 9W 220-240V D150	-20 °C to 40 °C	For mounting on normally flammable surfaces	Temperature 650 °C, duration 30 s
929003279608	DN020B G4 LED9/NW 9W 220-240V D150	-20 °C to 40 °C	For mounting on normally flammable surfaces	Temperature 650 °C, duration 30 s
929003279708	DN020B G4 LED9/CW 9W 220-240V D150	-20 °C to 40 °C	For mounting on normally flammable surfaces	Temperature 650 °C, duration 30 s
929003279817	DN020B G4 LED12/WW 13W 220-240V D150	-20 °C to 40 °C	For mounting on normally flammable surfaces	Temperature 650 °C, duration 30 s

Essential SmartBright LED Downlight

Order Code	Full Product Name	Ambient temperature range	Flammability mark	Glow-wire test
929003279917	DN020B G4 LED12/NW 13W 220-240V D150	-20 °C to 40 °C	For mounting on normally flammable surfaces	Temperature 650 °C, duration 30 s
929003280017	DN020B G4 LED12/CW 13W 220-240V D150	-20 °C to 40 °C	For mounting on normally flammable surfaces	Temperature 650 °C, duration 30 s
929003280117	DN020B G4 LED15/WW 16W 220-240V D175	-20 °C to 40 °C	For mounting on normally flammable surfaces	Temperature 650 °C, duration 30 s
929003280217	DN020B G4 LED15/NW 16W 220-240V D175	-20 °C to 40 °C	For mounting on normally flammable surfaces	Temperature 650 °C, duration 30 s
929003280317	DN020B G4 LED15/CW 16W 220-240V D175	-20 °C to 40 °C	For mounting on normally flammable surfaces	Temperature 650 °C, duration 30 s
929003280417	DN020B G4 LED20/WW 20W 220-240V D200	-20 °C to 40 °C	For mounting on normally flammable surfaces	Temperature 650 °C, duration 30 s
929003280517	DN020B G4 LED20/NW 20W 220-240V D200	-20 °C to 40 °C	For mounting on normally flammable surfaces	Temperature 650 °C, duration 30 s
929003280617	DN020B G4 LED20/CW 20W 220-240V D200	-20 °C to 40 °C	For mounting on normally flammable surfaces	Temperature 650 °C, duration 30 s
929002671502	DN027B G3 LED6/WW 6W 220-240V D90 RU	-20 to +40 °C	For mounting on normally flammable surfaces	Temperature 650 °C, duration 30 s
929002671538	DN027B G3 LED6/WW 6W 220-240V D90 RD	-20 to +40 °C	For mounting on normally flammable surfaces	Temperature 650 °C, duration 30 s
929002671602	DN027B G3 LED6/NW 6W 220-240V D90 RU	-20 to +40 °C	For mounting on normally flammable surfaces	Temperature 650 °C, duration 30 s
929002671638	DN027B G3 LED6/NW 6W 220-240V D90 RD	-20 to +40 °C	For mounting on normally flammable surfaces	Temperature 650 °C, duration 30 s
929002671702	DN027B G3 LED6/CW 6W 220-240V D90 RU	-20 to +40 °C	For mounting on normally flammable surfaces	Temperature 650 °C, duration 30 s
929002671738	DN027B G3 LED6/CW 6W 220-240V D90 RD	-20 to +40 °C	For mounting on normally flammable surfaces	Temperature 650 °C, duration 30 s
929002672138	DN027B G3 LED6/WW 6W 220-240V D100 RD	-20 to +40 °C	For mounting on normally flammable surfaces	Temperature 650 °C, duration 30 s
929002672238	DN027B G3 LED6/NW 6W 220-240V D100 RD	-20 to +40 °C	For mounting on normally flammable surfaces	Temperature 650 °C, duration 30 s
929002672338	DN027B G3 LED6/CW 6W 220-240V D100 RD	-20 to +40 °C	For mounting on normally flammable surfaces	Temperature 650 °C, duration 30 s
929002672702	DN027B G3 LED9/WW 9W 220-240V D125 RU	-20 to +40 °C	For mounting on normally flammable surfaces	Temperature 650 °C, duration 30 s
929002672738	DN027B G3 LED9/WW 9W 220-240V D125 RD	-20 to +40 °C	For mounting on normally flammable surfaces	Temperature 650 °C, duration 30 s
929002672802	DN027B G3 LED9/NW 9W 220-240V D125 RU	-20 to +40 °C	For mounting on normally flammable surfaces	Temperature 650 °C, duration 30 s
929002672838	DN027B G3 LED9/NW 9W 220-240V D125 RD	-20 to +40 °C	For mounting on normally flammable surfaces	Temperature 650 °C, duration 30 s
929002672902	DN027B G3 LED9/CW 9W 220-240V D125 RU	-20 to +40 °C	For mounting on normally flammable surfaces	Temperature 650 °C, duration 30 s
929002672938	DN027B G3 LED9/CW 9W 220-240V D125 RD	-20 to +40 °C	For mounting on normally flammable surfaces	Temperature 650 °C, duration 30 s
929002673302	DN027B G3 LED12/WW 12W 220-240V D150 RU	-20 to +40 °C	For mounting on normally flammable surfaces	Temperature 650 °C, duration 30 s

Essential SmartBright LED Downlight

Order Code	Full Product Name	Ambient temperature range	Flammability mark	Glow-wire test
929002673338	DN027B G3 LED12/WW 12W 220-240V D150 RD	-20 to +40 °C	For mounting on normally flammable surfaces	Temperature 650 °C, duration 30 s
929002673402	DN027B G3 LED12/NW 12W 220-240V D150 RU	-20 to +40 °C	For mounting on normally flammable surfaces	Temperature 650 °C, duration 30 s
929002673438	DN027B G3 LED12/NW 12W 220-240V D150 RD	-20 to +40 °C	For mounting on normally flammable surfaces	Temperature 650 °C, duration 30 s
929002673502	DN027B G3 LED12/CW 12W 220-240V D150 RU	-20 to +40 °C	For mounting on normally flammable surfaces	Temperature 650 °C, duration 30 s
929002673538	DN027B G3 LED12/CW 12W 220-240V D150 RD	-20 to +40 °C	For mounting on normally flammable surfaces	Temperature 650 °C, duration 30 s
929002673938	DN027B G3 LED15/WW 15W 220-240 D175 RD	-20 to +40 °C	For mounting on normally flammable surfaces	Temperature 650 °C, duration 30 s
929002674002	DN027B G3 LED15/NW 15W 220V D175 RU	-20 to +40 °C	For mounting on normally flammable surfaces	Temperature 650 °C, duration 30 s
929002674038	DN027B G3 LED15/NW 15W 220-240 D175 RD	-20 to +40 °C	For mounting on normally flammable surfaces	Temperature 650 °C, duration 30 s
929002674102	DN027B G3 LED15/CW 15W 220V D175 RU	-20 to +40 °C	For mounting on normally flammable surfaces	Temperature 650 °C, duration 30 s
929002674138	DN027B G3 LED15/CW 15W 220-240 D175 RD	-20 to +40 °C	For mounting on normally flammable surfaces	Temperature 650 °C, duration 30 s
929002674538	DN027B G3 LED20/WW 19W 220-240V D200 RD	-20 to +40 °C	For mounting on normally flammable surfaces	Temperature 650 °C, duration 30 s
929002674602	DN027B G3 LED20/NW 19W 220-240V D200 RU	-20 to +40 °C	For mounting on normally flammable surfaces	Temperature 650 °C, duration 30 s
929002674638	DN027B G3 LED20/NW 19W 220-240V D200 RD	-20 to +40 °C	For mounting on normally flammable surfaces	Temperature 650 °C, duration 30 s
929002674702	DN027B G3 LED20/CW 19W 220-240V D200 RU	-20 to +40 °C	For mounting on normally flammable surfaces	Temperature 650 °C, duration 30 s
929002674738	DN027B G3 LED20/CW 19W 220-240V D200 RD	-20 to +40 °C	For mounting on normally flammable surfaces	Temperature 650 °C, duration 30 s
929002675738	DN027C G3 LED9/WW 9W 220-240V D150	-20 to +40 °C	For mounting on normally flammable surfaces	Temperature 650 °C, duration 30 s
929002675838	DN027C G3 LED9/NW 9W 220-240V D150	-20 to +40 °C	For mounting on normally flammable surfaces	Temperature 650 °C, duration 30 s
929002675938	DN027C G3 LED9/CW 9W 220-240V D150	-20 to +40 °C	For mounting on normally flammable surfaces	Temperature 650 °C, duration 30 s
929002676038	DN027C G3 LED12/WW 12W 220-240V D175	-20 to +40 °C	For mounting on normally flammable surfaces	Temperature 650 °C, duration 30 s
929002676138	DN027C G3 LED12/NW 12W 220-240V D175	-20 to +40 °C	For mounting on normally flammable surfaces	Temperature 650 °C, duration 30 s
929002676238	DN027C G3 LED12/CW 12W 220-240V D175	-20 to +40 °C	For mounting on normally flammable surfaces	Temperature 650 °C, duration 30 s
929002676338	DN027C G3 LED15/WW 15W 220-240V D200	-20 to +40 °C	For mounting on normally flammable surfaces	Temperature 650 °C, duration 30 s
929002676438	DN027C G3 LED15/NW 15W 220-240V D200	-20 to +40 °C	For mounting on normally flammable surfaces	Temperature 650 °C, duration 30 s
929002676538	DN027C G3 LED15/CW 15W 220-240V D200	-20 to +40 °C	For mounting on normally flammable surfaces	Temperature 650 °C, duration 30 s

Essential SmartBright LED Downlight

Order Code	Full Product Name	Ambient temperature range	Flammability mark	Glow-wire test
929002676638	DN027C G3 LED20/WW 19W 220-240V D225	-20 to +40 °C	For mounting on normally flammable surfaces	Temperature 650 °C, duration 30 s
929002676738	DN027C G3 LED20/NW 19W 220-240V D225	-20 to +40 °C	For mounting on normally flammable surfaces	Temperature 650 °C, duration 30 s
929002676838	DN027C G3 LED20/CW 19W 220-240V D225	-20 to +40 °C	For mounting on normally flammable surfaces	Temperature 650 °C, duration 30 s
929002677040	DN500B G3 LED6/NW 6W 220V D90 RD	-20 to +40 °C	For mounting on normally flammable surfaces	Temperature 650 °C, duration 30 s
929002677140	DN500B G3 LED6/CW 6W 220V D90 RD	-20 to +40 °C	For mounting on normally flammable surfaces	Temperature 650 °C, duration 30 s

Order Code	Full Product Name	Ambient temperature range	Flammability mark	Glow-wire test
929002677340	DN500B G3 LED9/NW 9W 220V D125 RD	-20 to +40 °C	For mounting on normally flammable surfaces	Temperature 650 °C, duration 30 s
929002677440	DN500B G3 LED9/CW 9W 220V D125 RD	-20 to +40 °C	For mounting on normally flammable surfaces	Temperature 650 °C, duration 30 s
929002677640	DN500B G3 LED12/NW 12W 220V D150 RD	-20 to +40 °C	For mounting on normally flammable surfaces	Temperature 650 °C, duration 30 s
929002677740	DN500B G3 LED12/CW 12W 220V D150 RD	-20 to +40 °C	For mounting on normally flammable surfaces	Temperature 650 °C, duration 30 s

Initial Performance (IEC Compliant)

Order Code	Full Product Name	Initial chromaticity	Luminous flux tolerance
929002508208	DN020B G3 LED3/WW 3.5W 220-240V D80 GM	(0.4339, 0.4033) 6	-
929002508308	DN020B G3 LED3/NW 3.5W 220-240V D80 GM	(0.3818, 0.3797) 6	-
929002508408	DN020B G3 LED3/CW 3.5W 220-240V D80 GM	(0.3123, 0.3283) 6	-
929002508608	DN020B G3 LED4/NW 4.5W 220-240V D90 GM	(0.3818, 0.3797) 6	-
929002509108	DN020B G3 LED6/WW 7W 220-240V D125 GM	(0.4339, 0.4033) 6	-
929002509208	DN020B G3 LED6/NW 7W 220-240V D125 GM	(0.3818, 0.3797) 6	-
929002509308	DN020B G3 LED6/CW 7W 220-240V D125 GM	(0.3123, 0.3283) 6	-
929002509708	DN020B G3 LED9/WW 10.5W 220-240V D150 GM	(0.4339, 0.4033) 6	-
929002509808	DN020B G3 LED9/NW 10.5W 220-240V D150 GM	(0.3818, 0.3797) 6	-
929002509908	DN020B G3 LED9/CW 10.5W 220-240V D150 GM	(0.3123, 0.3283) 6	-
929003269510	DN200 G3 LED3 830 3.5W D80 CN	(X=, 0.4377 ; Y=, 0.4055) 5SDCM	+/-10%
929003269610	DN200 G3 LED3 840 3.5W D80 CN	(X=, 0.3863 ; Y=, 0.3863) 5SDCM	+/-10%

Order Code	Full Product Name	Initial chromaticity	Luminous flux tolerance
929003269710	DN200 G3 LED3 865 3.5W D80 CN	(X=, 0.3115 ; Y=, 0.3258) 5SDCM	+/-10%
929003269810	DN200 G3 LED4 830 4.5W D90 CN	(X=, 0.4377 ; Y=, 0.4055) 5SDCM	+/-10%
929003269910	DN200 G3 LED4 840 4.5W D90 CN	(X=, 0.3863 ; Y=, 0.3863) 5SDCM	+/-10%
929003270010	DN200 G3 LED4 865 4.5W D90 CN	(X=, 0.3115 ; Y=, 0.3258) 5SDCM	+/-10%
929003270110	DN200 G3 LED6 830 6W D90 CN	(X=, 0.4377 ; Y=, 0.4055) 5SDCM	+/-10%
929003270210	DN200 G3 LED6 840 6W D90 CN	(X=, 0.3863 ; Y=, 0.3863) 5SDCM	+/-10%
929003270310	DN200 G3 LED6 865 6W D90 CN	(X=, 0.3115 ; Y=, 0.3258) 5SDCM	+/-10%
929003270410	DN200 G3 LED6 830 7W D100 CN	(X=, 0.4377 ; Y=, 0.4055) 5SDCM	+/-10%
929003270510	DN200 G3 LED6 840 7W D100 CN	(X=, 0.3863 ; Y=, 0.3863) 5SDCM	+/-10%
929003270610	DN200 G3 LED6 865 7W D100 CN	(X=, 0.3115 ; Y=, 0.3258) 5SDCM	+/-10%
929003270710	DN200 G3 LED6 830 6W D125 CN	(X=, 0.4377 ; Y=, 0.4055) 5SDCM	+/-10%
929003270810	DN200 G3 LED6 840 6W D125 CN	(X=, 0.3863 ; Y=, 0.3863) 5SDCM	+/-10%

Essential SmartBright LED Downlight

Order Code	Full Product Name	Initial chromaticity	Luminous flux tolerance
929003270910	DN200 G3 LED6 865 6W D125 CN	(X=, 0.3115 ; Y=, 0.3258) 5SDCM	+/-10%
929003271010	DN200 G3 LED9 830 10.5W D125 CN	(X=, 0.4377 ; Y=, 0.4055) 5SDCM	+/-10%
929003271110	DN200 G3 LED9 840 10.5W D125 CN	(X=, 0.3863 ; Y=, 0.3863) 5SDCM	+/-10%
929003271210	DN200 G3 LED9 865 10.5W D125 CN	(X=, 0.3115 ; Y=, 0.3258) 5SDCM	+/-10%
929003271310	DN200 G3 LED9 830 9W D150 CN	(X=, 0.4377 ; Y=, 0.4055) 5SDCM	+/-10%
929003271410	DN200 G3 LED9 840 9W D150 CN	(X=, 0.3863 ; Y=, 0.3863) 5SDCM	+/-10%
929003271510	DN200 G3 LED9 865 9W D150 CN	(X=, 0.3115 ; Y=, 0.3258) 5SDCM	+/-10%
929003271610	DN200 G3 LED12 830 13W D150 CN	(X=, 0.4377 ; Y=, 0.4055) 5SDCM	+/-10%
929003271710	DN200 G3 LED12 840 13W D150 CN	(X=, 0.3863 ; Y=, 0.3863) 5SDCM	+/-10%
929003271810	DN200 G3 LED12 865 13W D150 CN	(X=, 0.3115 ; Y=, 0.3258) 5SDCM	+/-10%
929003271910	DN200 G3 LED15 830 16W D175 CN	(X=, 0.4377 ; Y=, 0.4055) 5SDCM	+/-10%
929003272010	DN200 G3 LED15 840 16W D175 CN	(X=, 0.3863 ; Y=, 0.3863) 5SDCM	+/-10%
929003272110	DN200 G3 LED15 865 16W D175 CN	(X=, 0.3115 ; Y=, 0.3258) 5SDCM	+/-10%
929003272210	DN200 G3 LED20 830 20W D200 CN	(X=, 0.4377 ; Y=, 0.4055) 5SDCM	+/-10%
929003272310	DN200 G3 LED20 840 20W D200 CN	(X=, 0.3863 ; Y=, 0.3863) 5SDCM	+/-10%
929003272410	DN200 G3 LED20 865 20W D200 CN	(X=, 0.3115 ; Y=, 0.3258) 5SDCM	+/-10%
929002674838	DN027B G3 LED6/WW 6W 220-240V L100 SQ	(IEC3000K, 0.44, 0.403) < 5SDCM	+/-10%
929002674902	DN027B G3 LED6/NW 6W 220-240V L100 RU	(IEC4000K, 0.38, 0.38) < 5SDCM	+/-10%
929002674938	DN027B G3 LED6/NW 6W 220-240V L100 SQ	(IEC4000K, 0.38, 0.38) < 5SDCM	+/-10%
929002675002	DN027B G3 LED6/CW 6W 220-240V L100 RU	(IEC6500K, 0.313, 0.337) < 5SDCM	+/-10%
929002675038	DN027B G3 LED6/CW 6W 220-240V L100 SQ	(IEC6500K, 0.313, 0.337) < 5SDCM	+/-10%
929002675138	DN027B G3 LED9/WW 9W 220-240V L125 SQ	(IEC3000K, 0.44, 0.403) < 5SDCM	+/-10%
929002675202	DN027B G3 LED9/NW 9W 220-240V L125 RU	(IEC4000K, 0.38, 0.38) < 5SDCM	+/-10%
929002675238	DN027B G3 LED9/NW 9W 220-240V L125 SQ	(IEC4000K, 0.38, 0.38) < 5SDCM	+/-10%
929002675302	DN027B G3 LED9/CW 9W 220-240V L125 RU	(IEC6500K, 0.313, 0.337) < 5SDCM	+/-10%
929002675338	DN027B G3 LED9/CW 9W 220-240V L125 SQ	(IEC6500K, 0.313, 0.337) < 5SDCM	+/-10%
929002675438	DN027B G3 LED12/WW 12W 220-240V L150 SQ	(IEC3000K, 0.44, 0.403) < 5SDCM	+/-10%
929002675502	DN027B G3 LED12/NW 12W 220-240V L150 RU	(IEC4000K, 0.38, 0.38) < 5SDCM	+/-10%
929002675538	DN027B G3 LED12/NW 12W 220-240V L150 SQ	(IEC4000K, 0.38, 0.38) < 5SDCM	+/-10%
929002675602	DN027B G3 LED12/CW 12W 220-240V L150 RU	(IEC6500K, 0.313, 0.337) < 5SDCM	+/-10%
929002675638	DN027B G3 LED12/CW 12W 220-240V L150 SQ	(IEC6500K, 0.313, 0.337) < 5SDCM	+/-10%
929003277708	DN020B G4 LED3/WW 3.5W 220-240V D80	(X=, 0.4377 ; Y=, 0.4055) 5SDCM	+/-10%
929003277808	DN020B G4 LED3/NW 3.5W 220-240V D80	(X=, 0.3874 ; Y=, 0.388) 5SDCM	+/-10%
929003277908	DN020B G4 LED3/CW 3.5W 220-240V D80	(X=, 0.3139 ; Y=, 0.3326) 5SDCM	+/-10%
929003278017	DN020B G4 LED4/WW 4.5W 220-240V D90	(X=, 0.4377 ; Y=, 0.4055) 5SDCM	+/-10%
929003278117	DN020B G4 LED4/NW 4.5W 220-240V D90	(X=, 0.3874 ; Y=, 0.388) 5SDCM	+/-10%
929003278217	DN020B G4 LED4/CW 4.5W 220-240V D90	(X=, 0.3139 ; Y=, 0.3326) 5SDCM	+/-10%
929003278317	DN020B G4 LED6/WW 6W 220-240V D90	(X=, 0.4377 ; Y=, 0.4055) 5SDCM	+/-10%
929003278417	DN020B G4 LED6/NW 6W 220-240V D90	(X=, 0.3874 ; Y=, 0.388) 5SDCM	+/-10%
929003278517	DN020B G4 LED6/CW 6W 220-240V D90	(X=, 0.3139 ; Y=, 0.3326) 5SDCM	+/-10%
929003278608	DN020B G4 LED6/WW 7W 220-240V D100	(X=, 0.4377 ; Y=, 0.4055) 5SDCM	+/-10%
929003278708	DN020B G4 LED6/NW 7W 220-240V D100	(X=, 0.3874 ; Y=, 0.388) 5SDCM	+/-10%
929003278808	DN020B G4 LED6/CW 7W 220-240V D100	(X=, 0.3139 ; Y=, 0.3326) 5SDCM	+/-10%
929003278908	DN020B G4 LED6/WW 6W 220-240V D125	(X=, 0.4377 ; Y=, 0.4055) 5SDCM	+/-10%
929003279008	DN020B G4 LED6/NW 6W 220-240V D125	(X=, 0.3839 ; Y=, 0.3843) 5SDCM	+/-10%
929003279108	DN020B G4 LED6/CW 6W 220-240V D125	(X=, 0.3117 ; Y=, 0.3273) 5SDCM	+/-10%
929003279217	DN020B G4 LED9/WW 10.5W 220-240V D125	(X=, 0.4377 ; Y=, 0.4055) 5SDCM	+/-10%
929003279317	DN020B G4 LED9/NW 10.5W 220-240V D125	(X=, 0.3839 ; Y=, 0.3843) 5SDCM	+/-10%
929003279417	DN020B G4 LED9/CW 10.5W 220-240V D125	(X=, 0.3117 ; Y=, 0.3273) 5SDCM	+/-10%
929003279508	DN020B G4 LED9/WW 9W 220-240V D150	(X=, 0.4377 ; Y=, 0.4055) 5SDCM	+/-10%

Essential SmartBright LED Downlight

Order Code	Full Product Name	Initial chromaticity	Luminous flux tolerance
929003279608	DN020B G4 LED9/NW 9W 220-240V D150	(X=, 0.3839 ; Y=, 0.3843) 5SDCM	+/-10%
929003279708	DN020B G4 LED9/CW 9W 220-240V D150	(X=, 0.3117 ; Y=, 0.3273) 5SDCM	+/-10%
929003279817	DN020B G4 LED12/WW 13W 220-240V D150	(X=, 0.4377 ; Y=, 0.4055) 5SDCM	+/-10%
929003279917	DN020B G4 LED12/NW 13W 220-240V D150	(X=, 0.3839 ; Y=, 0.3843) 5SDCM	+/-10%
929003280017	DN020B G4 LED12/CW 13W 220-240V D150	(X=, 0.3117 ; Y=, 0.3273) 5SDCM	+/-10%
929003280117	DN020B G4 LED15/WW 16W 220-240V D175	(X=, 0.4377 ; Y=, 0.4055) 5SDCM	+/-10%
929003280217	DN020B G4 LED15/NW 16W 220-240V D175	(X=, 0.3839 ; Y=, 0.3843) 5SDCM	+/-10%
929003280317	DN020B G4 LED15/CW 16W 220-240V D175	(X=, 0.3117 ; Y=, 0.3273) 5SDCM	+/-10%
929003280417	DN020B G4 LED20/WW 20W 220-240V D200	(X=, 0.4377 ; Y=, 0.4055) 5SDCM	+/-10%
929003280517	DN020B G4 LED20/NW 20W 220-240V D200	(X=, 0.3839 ; Y=, 0.3843) 5SDCM	+/-10%
929003280617	DN020B G4 LED20/CW 20W 220-240V D200	(X=, 0.3117 ; Y=, 0.3273) 5SDCM	+/-10%
929002671502	DN027B G3 LED6/WW 6W 220-240V D90 RU	(IEC3000K, 0.44, 0.403) < 5SDCM	+/-10%
929002671538	DN027B G3 LED6/WW 6W 220-240V D90 RD	(IEC3000K, 0.44, 0.403) < 5SDCM	+/-10%
929002671602	DN027B G3 LED6/NW 6W 220-240V D90 RU	(IEC4000K, 0.38, 0.38) < 5SDCM	+/-10%
929002671638	DN027B G3 LED6/NW 6W 220-240V D90 RD	(IEC4000K, 0.38, 0.38) < 5SDCM	+/-10%
929002671702	DN027B G3 LED6/CW 6W 220-240V D90 RU	(IEC6500K, 0.313, 0.337) < 5SDCM	+/-10%
929002671738	DN027B G3 LED6/CW 6W 220-240V D90 RD	(IEC6500K, 0.313, 0.337) < 5SDCM	+/-10%
929002672138	DN027B G3 LED6/WW 6W 220-240V D100 RD	(IEC3000K, 0.44, 0.403) < 5SDCM	+/-10%
929002672238	DN027B G3 LED6/NW 6W 220-240V D100 RD	(IEC4000K, 0.38, 0.38) < 5SDCM	+/-10%
929002672338	DN027B G3 LED6/CW 6W 220-240V D100 RD	(IEC6500K, 0.313, 0.337) < 5SDCM	+/-10%
929002672702	DN027B G3 LED9/WW 9W 220-240V D125 RU	(IEC3000K, 0.44, 0.403) < 5SDCM	+/-10%
929002672738	DN027B G3 LED9/WW 9W 220-240V D125 RD	(IEC3000K, 0.44, 0.403) < 5SDCM	+/-10%
929002672802	DN027B G3 LED9/NW 9W 220-240V D125 RU	(IEC4000K, 0.38, 0.38) < 5SDCM	+/-10%
929002672838	DN027B G3 LED9/NW 9W 220-240V D125 RD	(IEC4000K, 0.38, 0.38) < 5SDCM	+/-10%
929002672902	DN027B G3 LED9/CW 9W 220-240V D125 RU	(IEC6500K, 0.313, 0.337) < 5SDCM	+/-10%

Order Code	Full Product Name	Initial chromaticity	Luminous flux tolerance
929002672938	DN027B G3 LED9/CW 9W 220-240V D125 RD	(IEC6500K, 0.313, 0.337) < 5SDCM	+/-10%
929002673302	DN027B G3 LED12/WW 12W 220-240V D150 RU	(IEC3000K, 0.44, 0.403) < 5SDCM	+/-10%
929002673338	DN027B G3 LED12/WW 12W 220-240V D150 RD	(IEC3000K, 0.44, 0.403) < 5SDCM	+/-10%
929002673402	DN027B G3 LED12/NW 12W 220-240V D150 RU	(IEC4000K, 0.38, 0.38) < 5SDCM	+/-10%
929002673438	DN027B G3 LED12/NW 12W 220-240V D150 RD	(IEC4000K, 0.38, 0.38) < 5SDCM	+/-10%
929002673502	DN027B G3 LED12/CW 12W 220-240V D150 RU	(IEC6500K, 0.313, 0.337) < 5SDCM	+/-10%
929002673538	DN027B G3 LED12/CW 12W 220-240V D150 RD	(IEC6500K, 0.313, 0.337) < 5SDCM	+/-10%
929002673938	DN027B G3 LED15/WW 15W 220-240 D175 RD	(IEC3000K, 0.44, 0.403) < 5SDCM	+/-10%
929002674002	DN027B G3 LED15/NW 15W 220V D175 RU	(IEC4000K, 0.38, 0.38) < 5SDCM	+/-10%
929002674038	DN027B G3 LED15/NW 15W 220-240 D175 RD	(IEC4000K, 0.38, 0.38) < 5SDCM	+/-10%
929002674102	DN027B G3 LED15/CW 15W 220V D175 RU	(IEC6500K, 0.313, 0.337) < 5SDCM	+/-10%
929002674138	DN027B G3 LED15/CW 15W 220-240 D175 RD	(IEC6500K, 0.313, 0.337) < 5SDCM	+/-10%
929002674538	DN027B G3 LED20/WW 19W 220-240V D200 RD	(IEC3000K, 0.44, 0.403) < 5SDCM	+/-10%
929002674602	DN027B G3 LED20/NW 19W 220-240V D200 RU	(IEC4000K, 0.38, 0.38) < 5SDCM	+/-10%
929002674638	DN027B G3 LED20/NW 19W 220-240V D200 RD	(IEC4000K, 0.38, 0.38) < 5SDCM	+/-10%
929002674702	DN027B G3 LED20/CW 19W 220-240V D200 RU	(IEC6500K, 0.313, 0.337) < 5SDCM	+/-10%
929002674738	DN027B G3 LED20/CW 19W 220-240V D200 RD	(IEC6500K, 0.313, 0.337) < 5SDCM	+/-10%
929002675738	DN027C G3 LED9/WW 9W 220-240V D150	(IEC3000K, 0.44, 0.403) < 5SDCM	+/-10%
929002675838	DN027C G3 LED9/NW 9W 220-240V D150	(IEC4000K, 0.38, 0.38) < 5SDCM	+/-10%
929002675938	DN027C G3 LED9/CW 9W 220-240V D150	(IEC6500K, 0.313, 0.337) < 5SDCM	+/-10%
929002676038	DN027C G3 LED12/WW 12W 220-240V D175	(IEC3000K, 0.44, 0.403) < 5SDCM	+/-10%
929002676138	DN027C G3 LED12/NW 12W 220-240V D175	(IEC4000K, 0.38, 0.38) < 5SDCM	+/-10%
929002676238	DN027C G3 LED12/CW 12W 220-240V D175	(IEC6500K, 0.313, 0.337) < 5SDCM	+/-10%
929002676338	DN027C G3 LED15/WW 15W 220-240V D200	(IEC3000K, 0.44, 0.403) < 5SDCM	+/-10%
929002676438	DN027C G3 LED15/NW 15W 220-240V D200	(IEC4000K, 0.38, 0.38) < 5SDCM	+/-10%

Essential SmartBright LED Downlight

Order Code	Full Product Name	Initial chromaticity	Luminous flux tolerance
929002676538	DN027C G3 LED15/CW 15W 220-240V D200	(IEC6500K, 0.313, 0.337) < 5SDCM	+/-10%
929002676638	DN027C G3 LED20/WW 19W 220-240V D225	(IEC3000K, 0.44, 0.403) < 5SDCM	+/-10%
929002676738	DN027C G3 LED20/NW 19W 220-240V D225	(IEC4000K, 0.38, 0.38) < 5SDCM	+/-10%
929002676838	DN027C G3 LED20/CW 19W 220-240V D225	(IEC6500K, 0.313, 0.337) < 5SDCM	+/-10%
929002677040	DN500B G3 LED6/NW 6W 220V D90 RD	(IEC4000K, 0.38, 0.38) < 5SDCM	+/-10%
929002677140	DN500B G3 LED6/CW 6W 220V D90 RD	(IEC6500K, 0.313, 0.337) < 5SDCM	+/-10%
929002677340	DN500B G3 LED9/NW 9W 220V D125 RD	(IEC4000K, 0.38, 0.38) < 5SDCM	+/-10%
929002677440	DN500B G3 LED9/CW 9W 220V D125 RD	(IEC6500K, 0.313, 0.337) < 5SDCM	+/-10%
929002677640	DN500B G3 LED12/NW 12W 220V D150 RD	(IEC4000K, 0.38, 0.38) < 5SDCM	+/-10%
929002677740	DN500B G3 LED12/CW 12W 220V D150 RD	(IEC6500K, 0.313, 0.337) < 5SDCM	+/-10%

Over Time Performance (IEC Compliant)

Order Code	Full Product Name	Driver failure rate at 5000 h
929002508208	DN020B G3 LED3/WW 3.5W 220-240V D80 GM	1.6 %
929002508308	DN020B G3 LED3/NW 3.5W 220-240V D80 GM	1.6 %
929002508408	DN020B G3 LED3/CW 3.5W 220-240V D80 GM	1.6 %
929002508608	DN020B G3 LED4/NW 4.5W 220-240V D90 GM	1.6 %
929002509108	DN020B G3 LED6/WW 7W 220-240V D125 GM	1.6 %
929002509208	DN020B G3 LED6/NW 7W 220-240V D125 GM	1.6 %
929002509308	DN020B G3 LED6/CW 7W 220-240V D125 GM	1.6 %
929002509708	DN020B G3 LED9/WW 10.5W 220-240V D150 GM	1.6 %
929002509808	DN020B G3 LED9/NW 10.5W 220-240V D150 GM	1.6 %
929002509908	DN020B G3 LED9/CW 10.5W 220-240V D150 GM	1.6 %
929003269510	DN200 G3 LED3 830 3.5W D80 CN	1.2 %
929003269610	DN200 G3 LED3 840 3.5W D80 CN	1.2 %
929003269710	DN200 G3 LED3 865 3.5W D80 CN	1.2 %
929003269810	DN200 G3 LED4 830 4.5W D90 CN	1.2 %
929003269910	DN200 G3 LED4 840 4.5W D90 CN	1.2 %
929003270010	DN200 G3 LED4 865 4.5W D90 CN	1.2 %
929003270110	DN200 G3 LED6 830 6W D90 CN	1.2 %
929003270210	DN200 G3 LED6 840 6W D90 CN	1.2 %
929003270310	DN200 G3 LED6 865 6W D90 CN	1.2 %
929003270410	DN200 G3 LED6 830 7W D100 CN	1.2 %
929003270510	DN200 G3 LED6 840 7W D100 CN	1.2 %
929003270610	DN200 G3 LED6 865 7W D100 CN	1.2 %
929003270710	DN200 G3 LED6 830 6W D125 CN	1.2 %
929003270810	DN200 G3 LED6 840 6W D125 CN	1.2 %
929003270910	DN200 G3 LED6 865 6W D125 CN	1.2 %
929003271010	DN200 G3 LED9 830 10.5W D125 CN	1.2 %
929003271110	DN200 G3 LED9 840 10.5W D125 CN	1.2 %
929003271210	DN200 G3 LED9 865 10.5W D125 CN	1.2 %
929003271310	DN200 G3 LED9 830 9W D150 CN	1.2 %
929003271410	DN200 G3 LED9 840 9W D150 CN	1.2 %
929003271510	DN200 G3 LED9 865 9W D150 CN	1.2 %
929003271610	DN200 G3 LED12 830 13W D150 CN	1.2 %
929003271710	DN200 G3 LED12 840 13W D150 CN	1.2 %
929003271810	DN200 G3 LED12 865 13W D150 CN	1.2 %
929003271910	DN200 G3 LED15 830 16W D175 CN	1.2 %
929003272010	DN200 G3 LED15 840 16W D175 CN	1.2 %
929003272110	DN200 G3 LED15 865 16W D175 CN	1.2 %
929003272210	DN200 G3 LED20 830 20W D200 CN	1.2 %
929003272310	DN200 G3 LED20 840 20W D200 CN	1.2 %
929003272410	DN200 G3 LED20 865 20W D200 CN	1.2 %
929002674838	DN027B G3 LED6/WW 6W 220-240V L100 SQ	0.012 %
929002674902	DN027B G3 LED6/NW 6W 220-240V L100 RU	0.012 %
929002674938	DN027B G3 LED6/NW 6W 220-240V L100 SQ	0.012 %
929002675002	DN027B G3 LED6/CW 6W 220-240V L100 RU	0.012 %
929002675038	DN027B G3 LED6/CW 6W 220-240V L100 SQ	0.012 %
929002675138	DN027B G3 LED9/WW 9W 220-240V L125 SQ	0.012 %
929002675202	DN027B G3 LED9/NW 9W 220-240V L125 RU	0.012 %
929002675238	DN027B G3 LED9/NW 9W 220-240V L125 SQ	0.012 %
929002675302	DN027B G3 LED9/CW 9W 220-240V L125 RU	0.012 %
929002675338	DN027B G3 LED9/CW 9W 220-240V L125 SQ	0.012 %
929002675438	DN027B G3 LED12/WW 12W 220-240V L150 SQ	0.012 %
929002675502	DN027B G3 LED12/NW 12W 220-240V L150 RU	0.012 %
929002675538	DN027B G3 LED12/NW 12W 220-240V L150 SQ	0.012 %
929002675602	DN027B G3 LED12/CW 12W 220-240V L150 RU	0.012 %
929002675638	DN027B G3 LED12/CW 12W 220-240V L150 SQ	0.012 %
929003277708	DN020B G4 LED3/WW 3.5W 220-240V D80	1.2
929003277808	DN020B G4 LED3/NW 3.5W 220-240V D80	1.2
929003277908	DN020B G4 LED3/CW 3.5W 220-240V D80	1.2
929003278017	DN020B G4 LED4/WW 4.5W 220-240V D90	1.2
929003278117	DN020B G4 LED4/NW 4.5W 220-240V D90	1.2
929003278217	DN020B G4 LED4/CW 4.5W 220-240V D90	1.2
929003278317	DN020B G4 LED6/WW 6W 220-240V D90	1.2
929003278417	DN020B G4 LED6/NW 6W 220-240V D90	1.2
929003278517	DN020B G4 LED6/CW 6W 220-240V D90	1.2
929003278608	DN020B G4 LED6/WW 7W 220-240V D100	1.2
929003278708	DN020B G4 LED6/NW 7W 220-240V D100	1.2
929003278808	DN020B G4 LED6/CW 7W 220-240V D100	1.2
929003278908	DN020B G4 LED6/WW 6W 220-240V D125	1.2
929003279008	DN020B G4 LED6/NW 6W 220-240V D125	1.2
929003279108	DN020B G4 LED6/CW 6W 220-240V D125	1.2

Essential SmartBright LED Downlight

Order Code	Full Product Name	Driver failure rate at 5000 h
929003279217	DN020B G4 LED9/WW 10.5W 220-240V D125	1.2
929003279317	DN020B G4 LED9/NW 10.5W 220-240V D125	1.2
929003279417	DN020B G4 LED9/CW 10.5W 220-240V D125	1.2
929003279508	DN020B G4 LED9/WW 9W 220-240V D150	1.2
929003279608	DN020B G4 LED9/NW 9W 220-240V D150	1.2
929003279708	DN020B G4 LED9/CW 9W 220-240V D150	1.2
929003279817	DN020B G4 LED12/WW 13W 220-240V D150	1.2
929003279917	DN020B G4 LED12/NW 13W 220-240V D150	1.2
929003280017	DN020B G4 LED12/CW 13W 220-240V D150	1.2
929003280117	DN020B G4 LED15/WW 16W 220-240V D175	1.2
929003280217	DN020B G4 LED15/NW 16W 220-240V D175	1.2
929003280317	DN020B G4 LED15/CW 16W 220-240V D175	1.2
929003280417	DN020B G4 LED20/WW 20W 220-240V D200	1.2
929003280517	DN020B G4 LED20/NW 20W 220-240V D200	1.2
929003280617	DN020B G4 LED20/CW 20W 220-240V D200	1.2
929002671502	DN027B G3 LED6/WW 6W 220-240V D90 RU	0.012 %
929002671538	DN027B G3 LED6/WW 6W 220-240V D90 RD	0.012 %
929002671602	DN027B G3 LED6/NW 6W 220-240V D90 RU	0.012 %
929002671638	DN027B G3 LED6/NW 6W 220-240V D90 RD	0.012 %
929002671702	DN027B G3 LED6/CW 6W 220-240V D90 RU	0.012 %
929002671738	DN027B G3 LED6/CW 6W 220-240V D90 RD	0.012 %
929002672138	DN027B G3 LED6/WW 6W 220-240V D100 RD	0.012 %
929002672238	DN027B G3 LED6/NW 6W 220-240V D100 RD	0.012 %
929002672338	DN027B G3 LED6/CW 6W 220-240V D100 RD	0.012 %
929002672702	DN027B G3 LED9/WW 9W 220-240V D125 RU	0.012 %
929002672738	DN027B G3 LED9/WW 9W 220-240V D125 RD	0.012 %
929002672802	DN027B G3 LED9/NW 9W 220-240V D125 RU	0.012 %
929002672838	DN027B G3 LED9/NW 9W 220-240V D125 RD	0.012 %
929002672902	DN027B G3 LED9/CW 9W 220-240V D125 RU	0.012 %
929002672938	DN027B G3 LED9/CW 9W 220-240V D125 RD	0.012 %
929002673302	DN027B G3 LED12/WW 12W 220-240V D150 RU	0.012 %
929002673338	DN027B G3 LED12/WW 12W 220-240V D150 RD	0.012 %
929002673402	DN027B G3 LED12/NW 12W 220-240V D150 RU	0.012 %
929002673438	DN027B G3 LED12/NW 12W 220-240V D150 RD	0.012 %
929002673502	DN027B G3 LED12/CW 12W 220-240V D150 RU	0.012 %
929002673538	DN027B G3 LED12/CW 12W 220-240V D150 RD	0.012 %
929002673938	DN027B G3 LED15/WW 15W 220-240 D175 RD	0.012 %
929002674002	DN027B G3 LED15/NW 15W 220V D175 RU	0.012 %
929002674038	DN027B G3 LED15/NW 15W 220-240 D175 RD	0.012 %
929002674102	DN027B G3 LED15/CW 15W 220V D175 RU	0.012 %
929002674138	DN027B G3 LED15/CW 15W 220-240 D175 RD	0.012 %
929002674538	DN027B G3 LED20/WW 19W 220-240V D200 RD	0.012 %
929002674602	DN027B G3 LED20/NW 19W 220-240V D200 RU	0.012 %
929002674638	DN027B G3 LED20/NW 19W 220-240V D200 RD	0.012 %
929002674702	DN027B G3 LED20/CW 19W 220-240V D200 RU	0.012 %
929002674738	DN027B G3 LED20/CW 19W 220-240V D200 RD	0.012 %
929002675738	DN027C G3 LED9/WW 9W 220-240V D150	0.012 %
929002675838	DN027C G3 LED9/NW 9W 220-240V D150	0.012 %
929002675938	DN027C G3 LED9/CW 9W 220-240V D150	0.012 %
929002676038	DN027C G3 LED12/WW 12W 220-240V D175	0.012 %
929002676138	DN027C G3 LED12/NW 12W 220-240V D175	0.012 %
929002676238	DN027C G3 LED12/CW 12W 220-240V D175	0.012 %
929002676338	DN027C G3 LED15/WW 15W 220-240V D200	0.012 %
929002676438	DN027C G3 LED15/NW 15W 220-240V D200	0.012 %
929002676538	DN027C G3 LED15/CW 15W 220-240V D200	0.012 %
929002676638	DN027C G3 LED20/WW 19W 220-240V D225	0.012 %
929002676738	DN027C G3 LED20/NW 19W 220-240V D225	0.012 %
929002676838	DN027C G3 LED20/CW 19W 220-240V D225	0.012 %
929002677040	DN500B G3 LED6/NW 6W 220V D90 RD	0.012 %
929002677140	DN500B G3 LED6/CW 6W 220V D90 RD	0.012 %
929002677340	DN500B G3 LED9/NW 9W 220V D125 RD	0.012 %
929002677440	DN500B G3 LED9/CW 9W 220V D125 RD	0.012 %
929002677640	DN500B G3 LED12/NW 12W 220V D150 RD	0.012 %
929002677740	DN500B G3 LED12/CW 12W 220V D150 RD	0.012 %

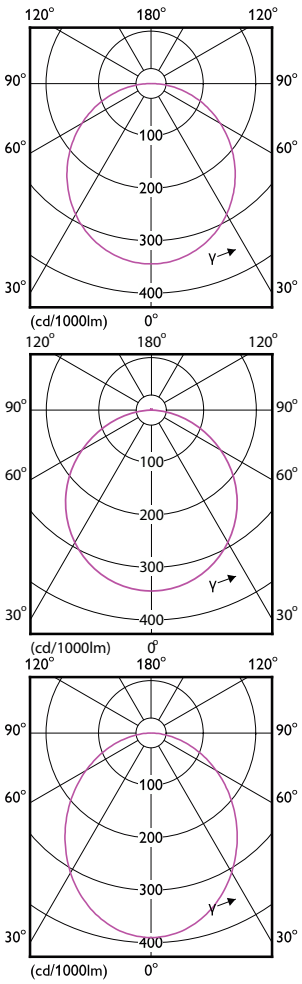

Essential SmartBright LED Downlight

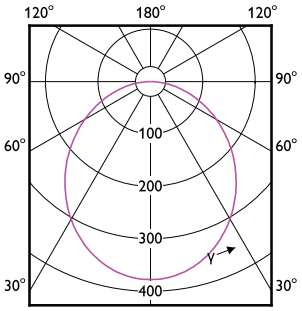

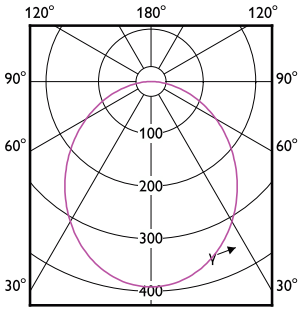

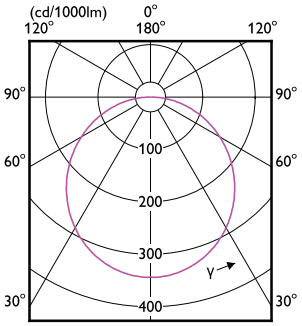

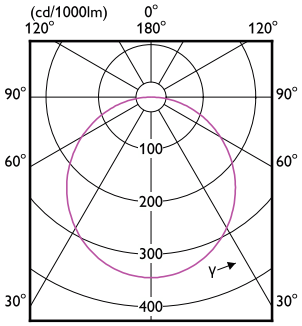

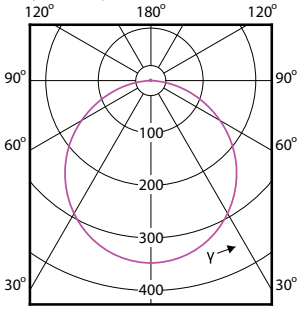

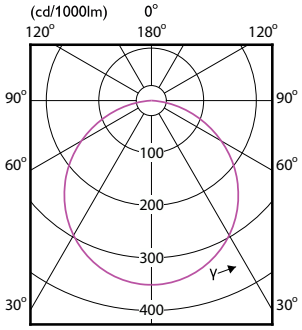

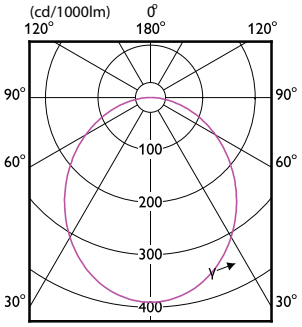

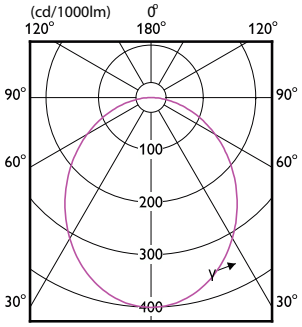

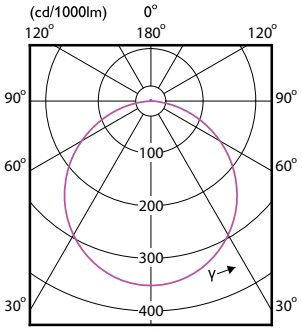

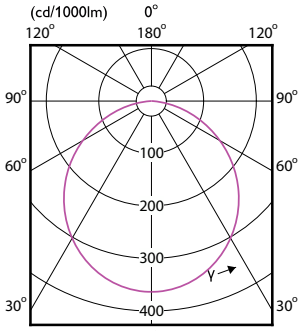

Essential SmartBright LED Downlight

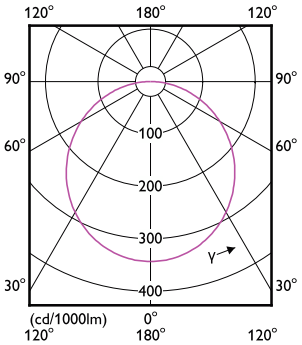

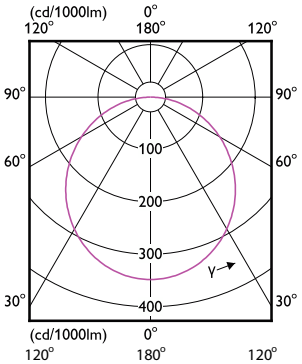

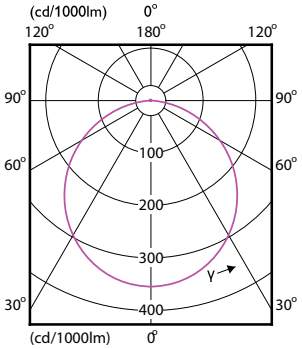

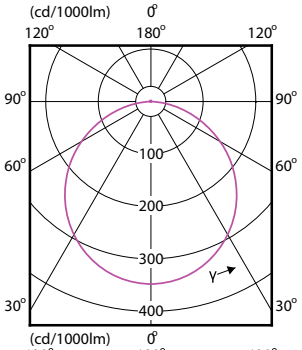

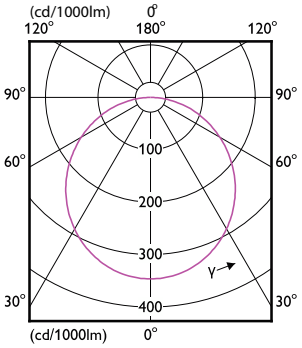

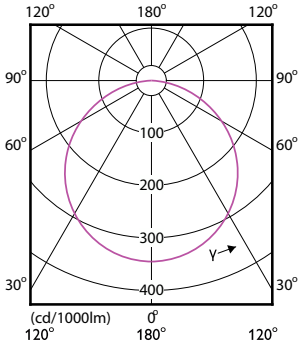

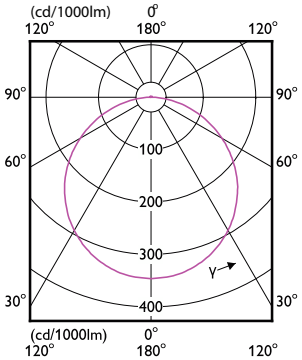

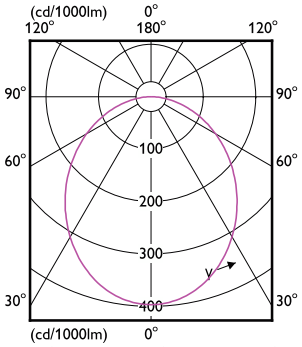

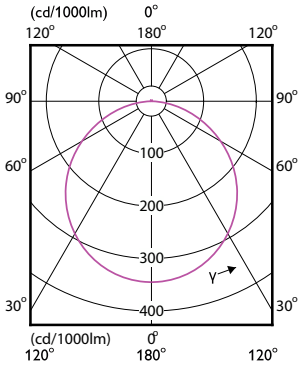

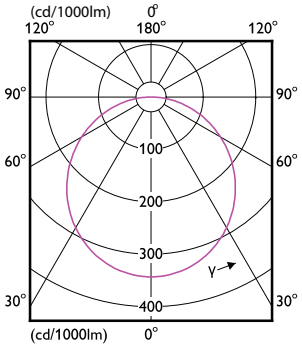

Essential SmartBright LED Downlight

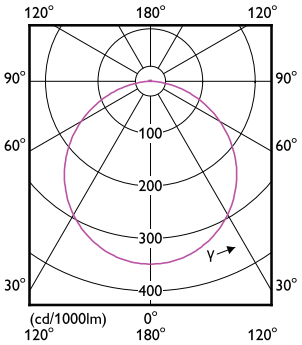

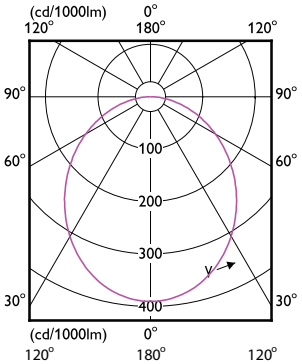

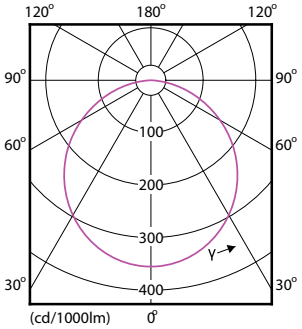

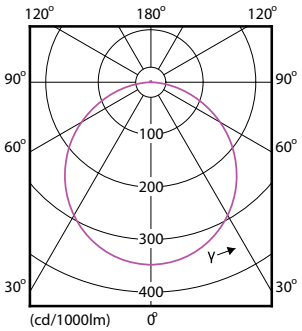

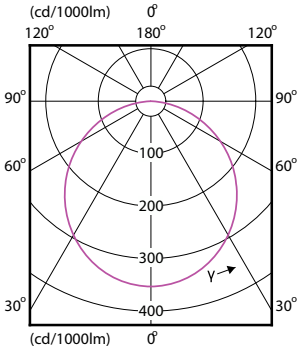

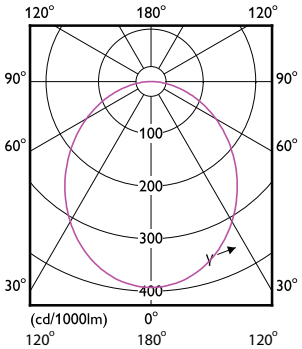

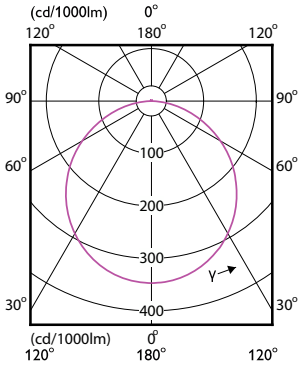

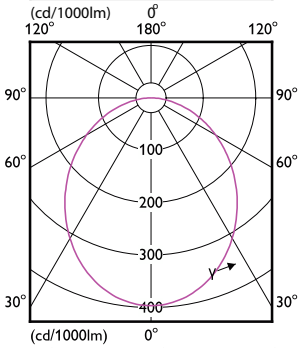

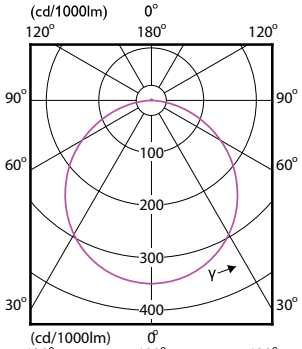

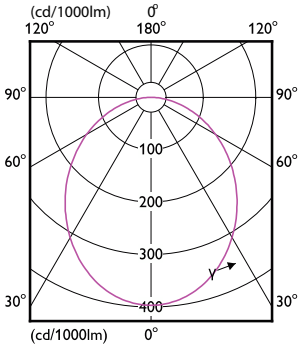

Essential SmartBright LED Downlight

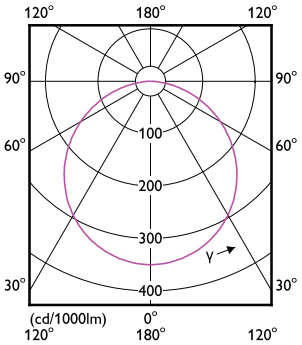

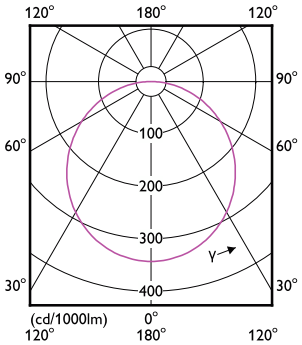

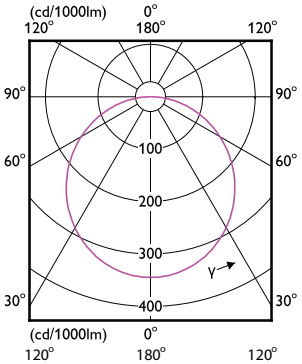

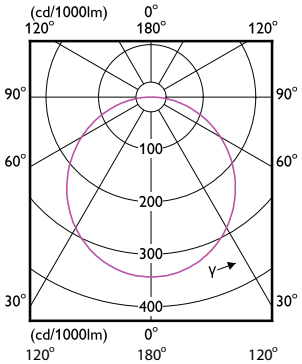

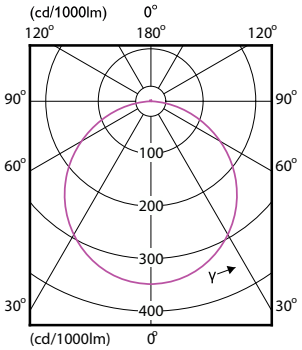

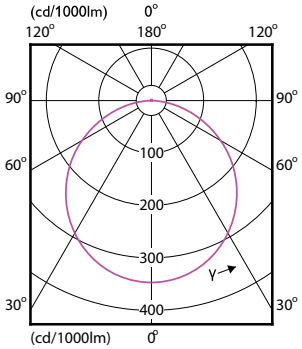

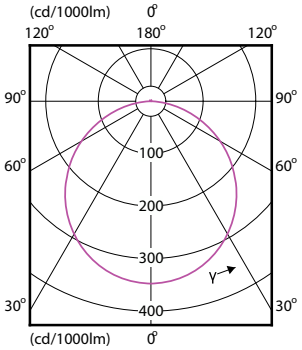

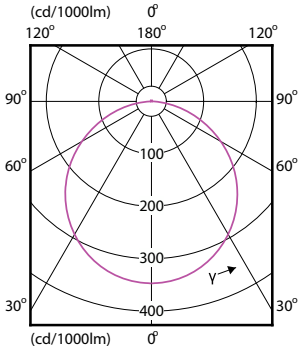

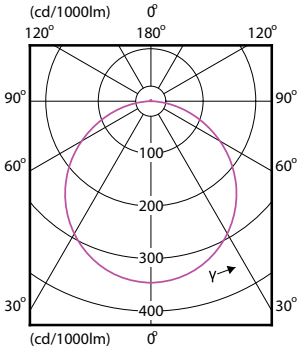

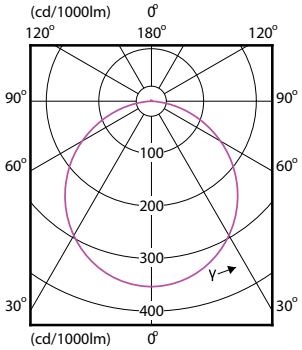

Essential SmartBright LED Downlight

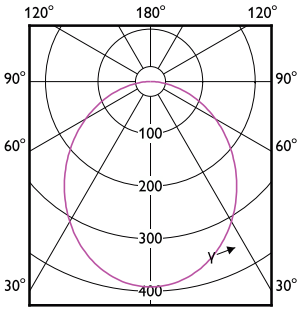

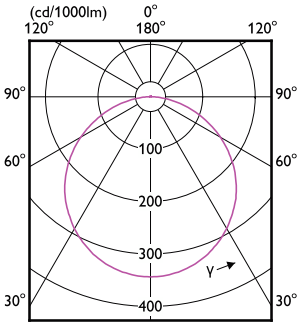

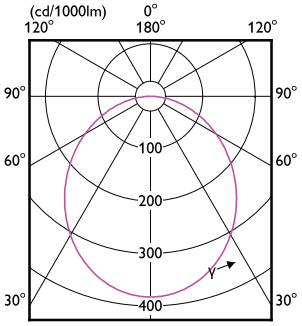

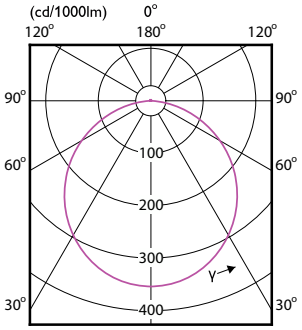

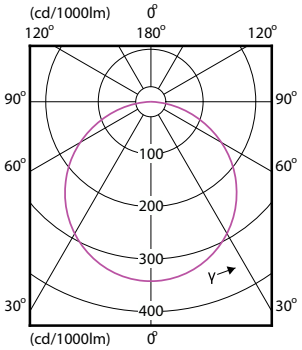

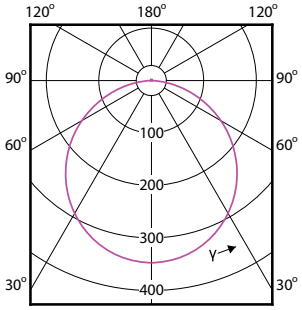

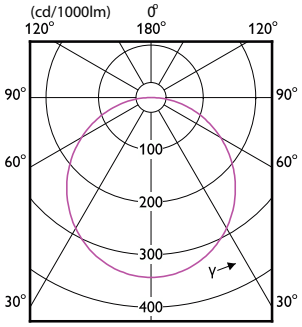

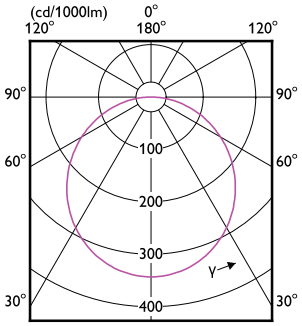

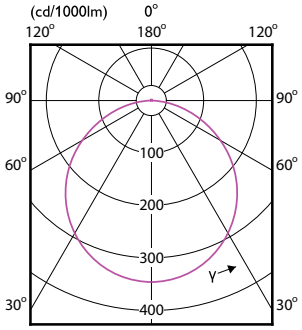

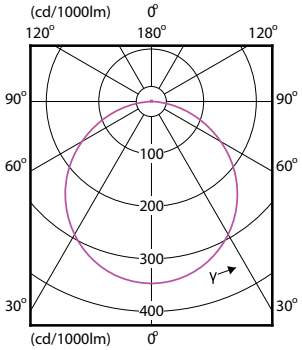

Essential SmartBright LED Downlight

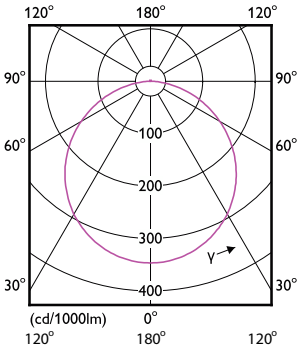

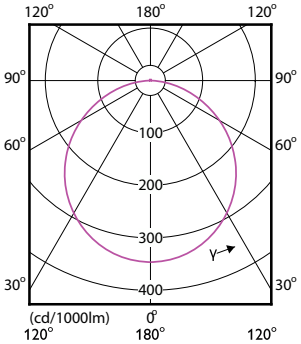

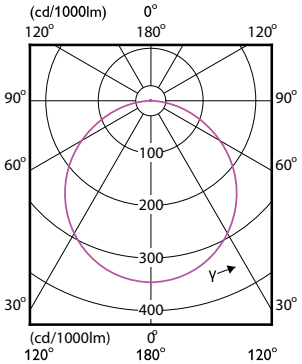

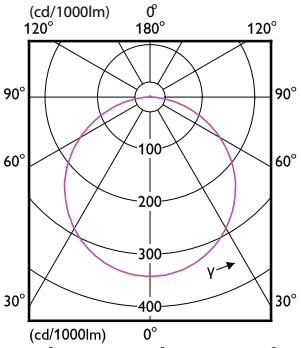

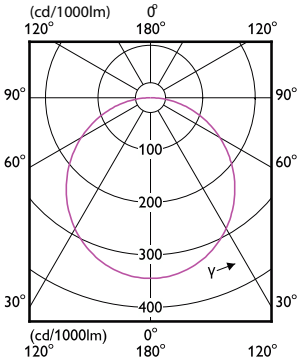

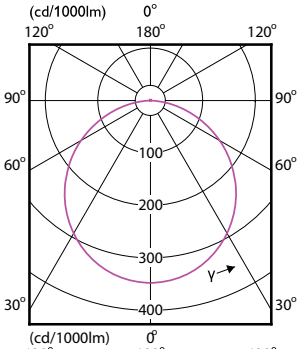

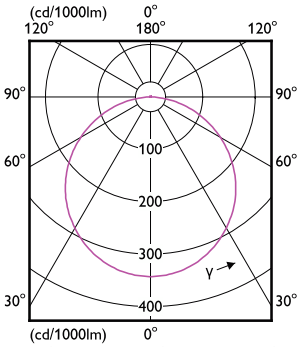

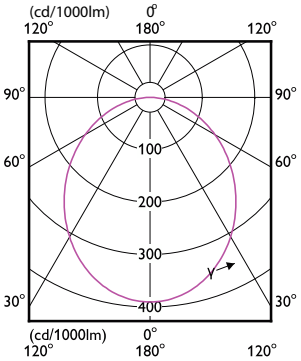

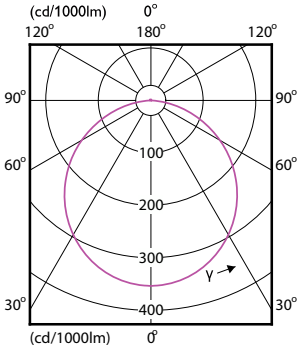

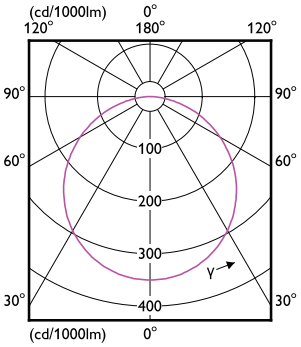

Essential SmartBright LED Downlight

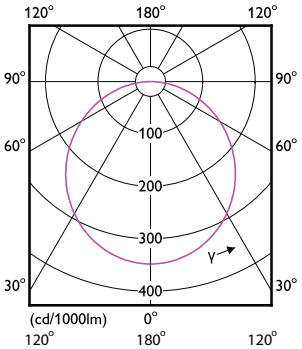

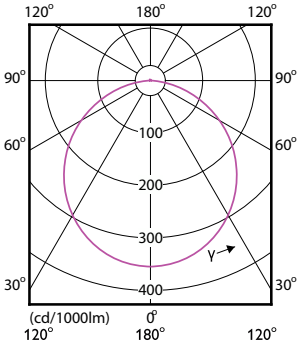

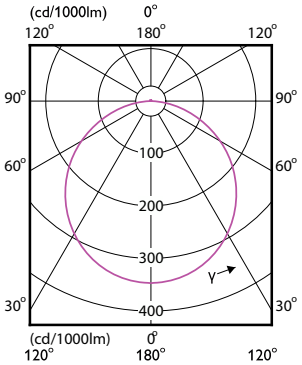

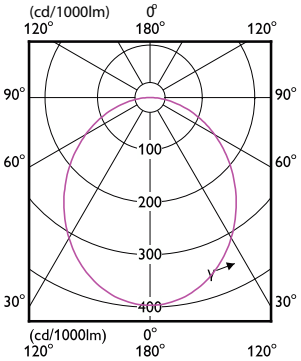

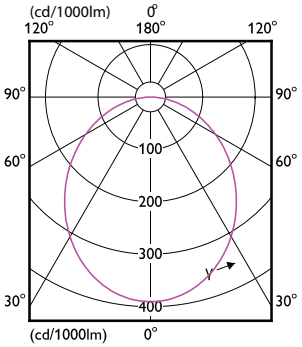

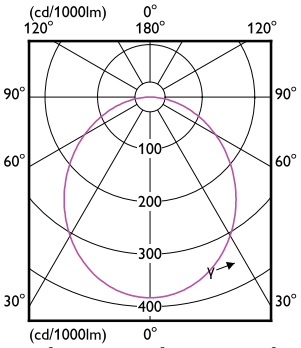

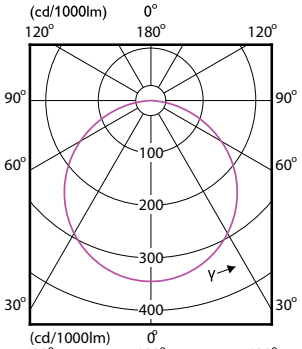

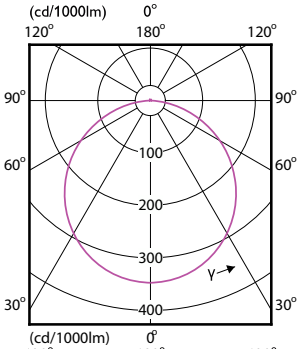

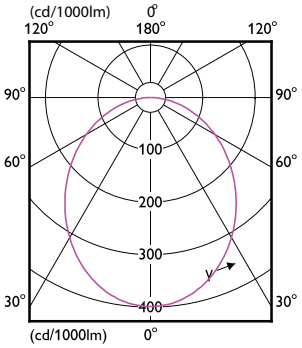

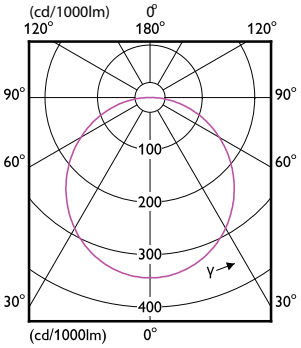

Essential SmartBright LED Downlight

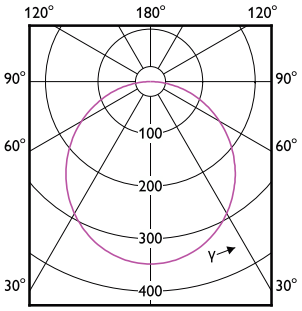

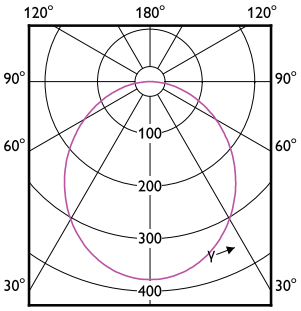

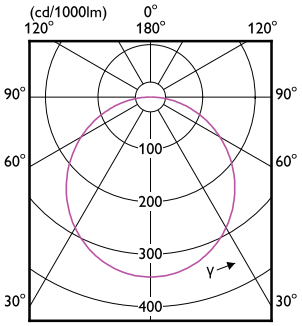

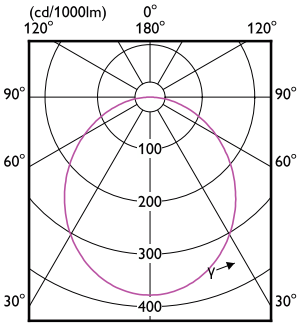

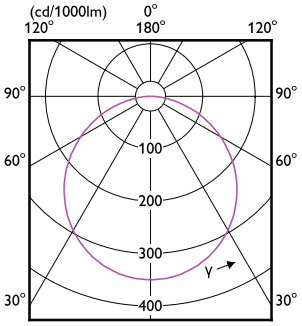

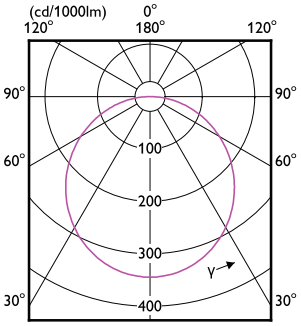

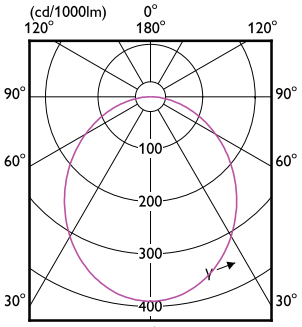

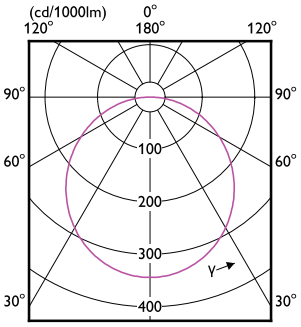

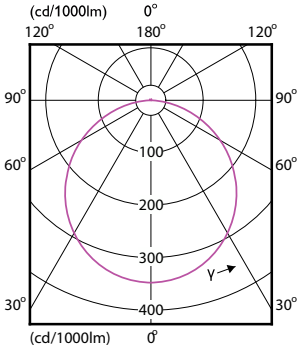

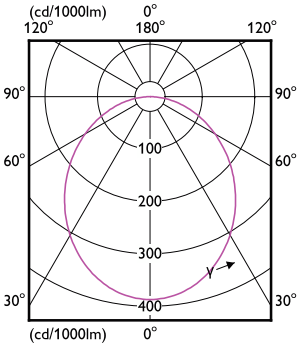

Essential SmartBright LED Downlight

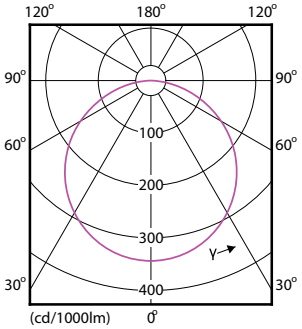

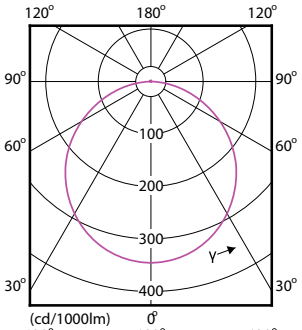

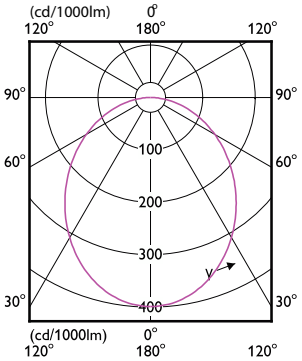

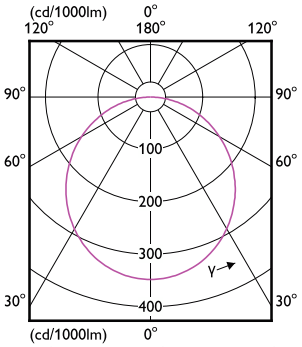

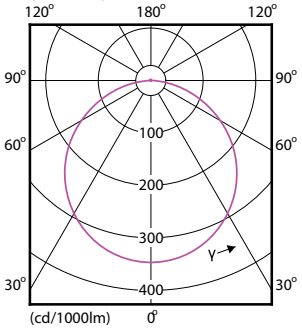

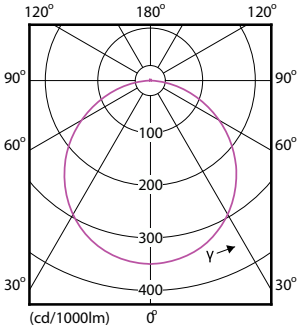

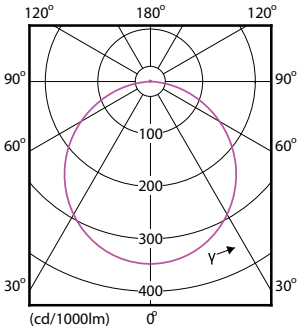

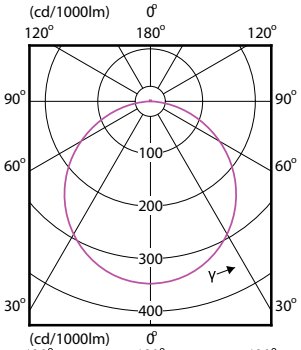

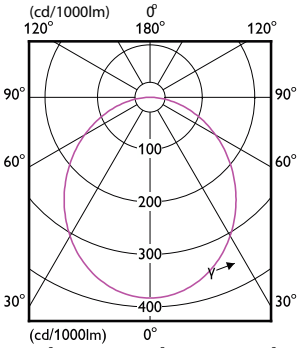

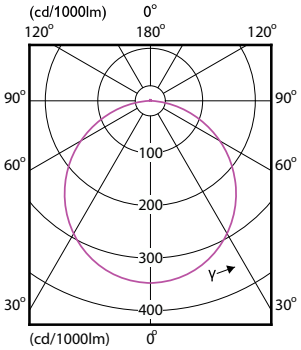

Essential SmartBright LED Downlight

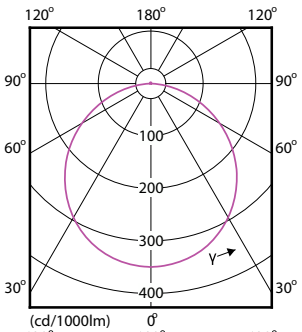

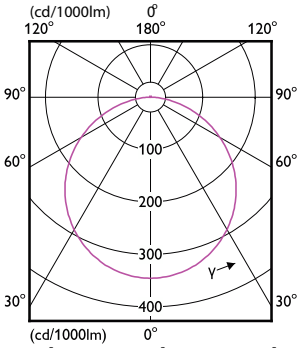

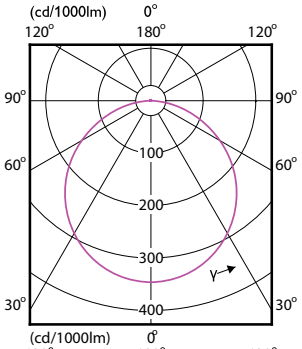

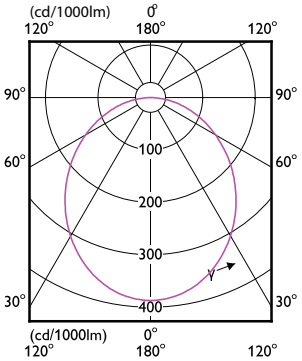

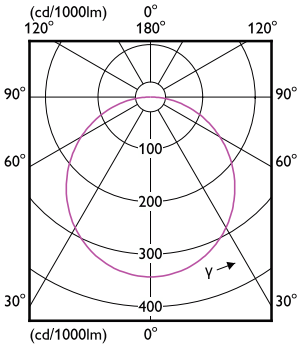

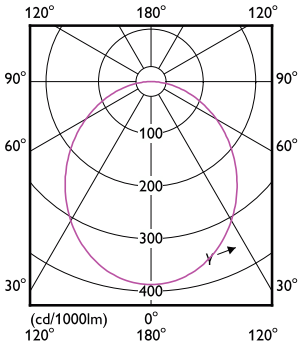

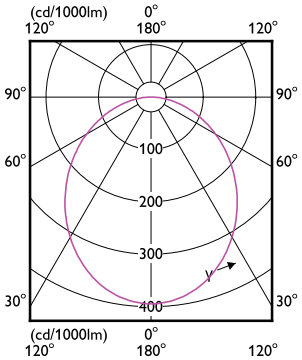

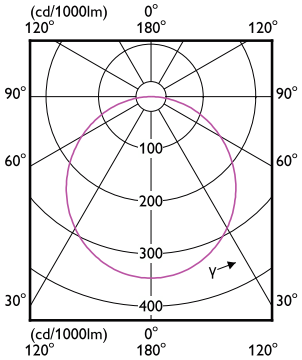

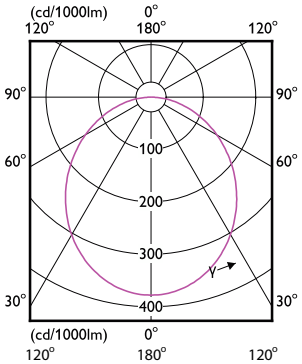

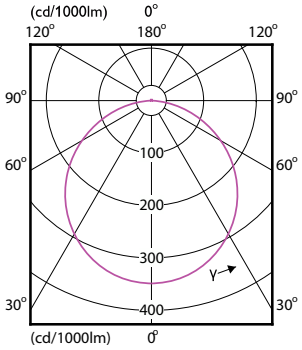

Essential SmartBright LED Downlight

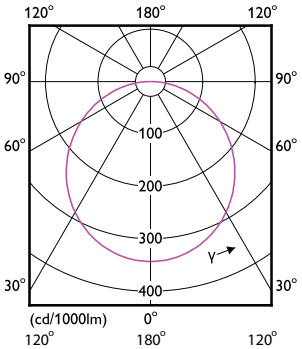

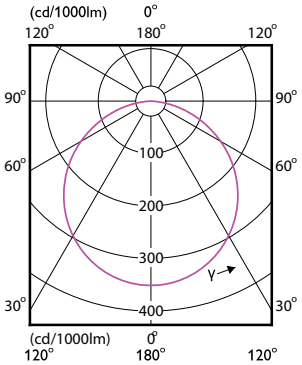

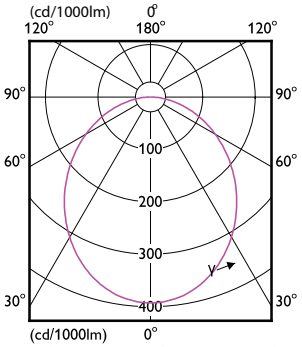

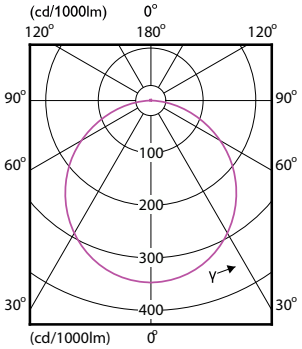

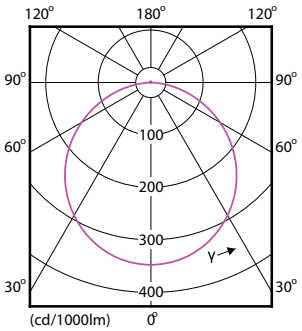

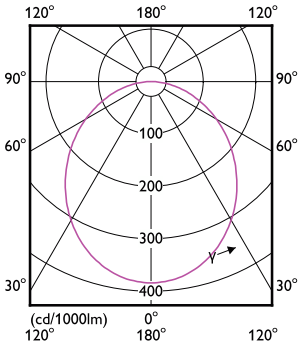

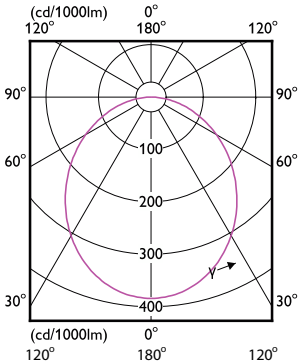

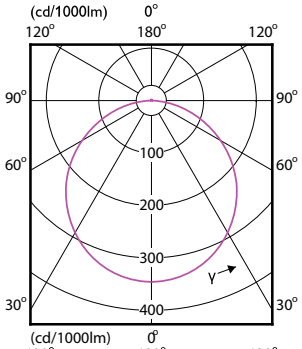

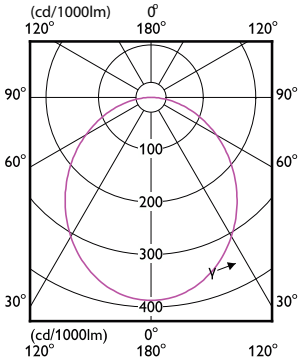

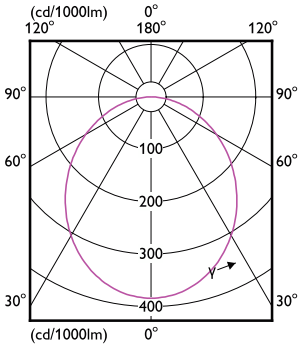

Essential SmartBright LED Downlight

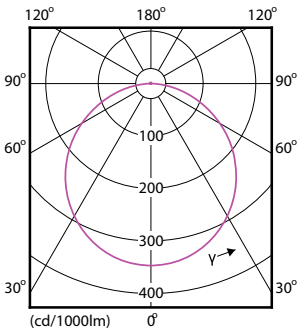

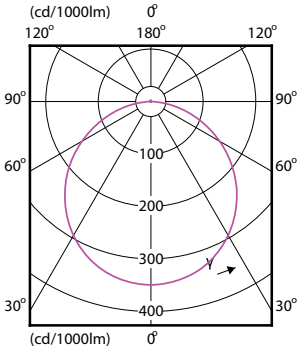

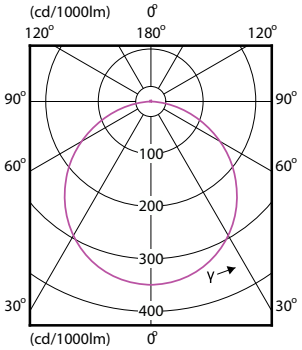

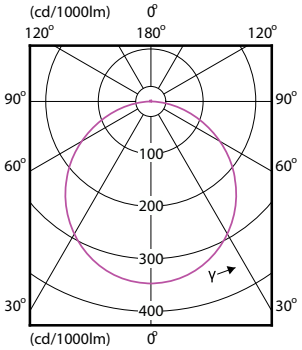

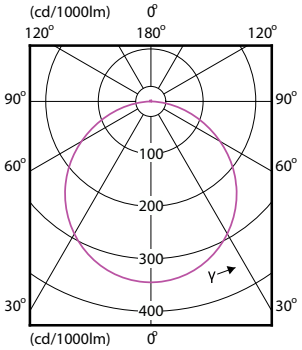

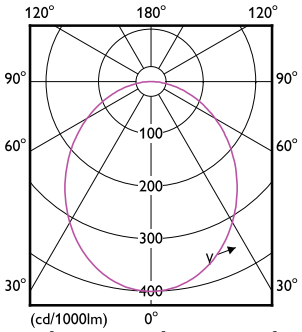

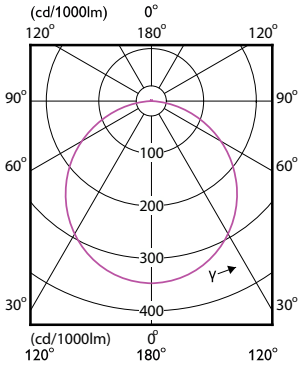

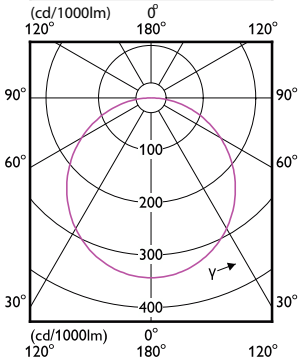

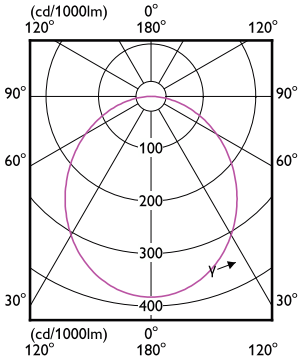

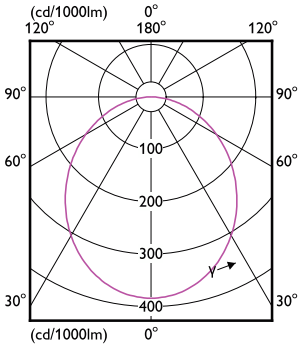

Essential SmartBright LED Downlight

© 2025 Signify Holding All rights reserved. Signify does not give any representation or warranty as to the accuracy or completeness of the information included herein and shall not be liable for any action in reliance thereon. The information presented in this document is not intended as any commercial offer and does not form part of any quotation or contract, unless otherwise agreed by Signify. All trademarks are owned by Signify Holding or their respective owners.