PHILIPS

Smart Post-top G3

BGP161



Smart Post-top G3-BGP161

Smart Post Top G3 inherits the classic look and style of the previous generation with improved system efficacy and light quality. The Smart Post Top G3 optimized optical design increases both horizontal and vertical uniformity. The highly efficient thermal system design ensures maximum heat transfer and longer LED service life. This reliable luminaire system operates well in both low and high temperature environments. It offers more than 11 years expected life, reducing maintenance frequency and cost (based on a 50,000 hour rated life and 12 hours operation per day). It provides a comfortable and safe atmosphere to gardens, residential areas, courtyards, side streets, squares, parks & playgrounds.

Benefits

- Outstanding Lighting Performance
- Reliable Quality
- Environment Friendly

Applications

- residential area, path way, park, etc.

Features

- SDCM≤4 high uniformity, up to 92 lm/w, high system efficacy, up to 2500lm high brightness, CRI>70 shows true colour.

- 50K hours lifetime @L70B50 IP65,IK07, water and shock resistant Corrosion resistant painting, aluminum housing, anti UV polycarbonate optics.
- Compliant with the material restriction requirements of RoHS significant energy saving compared to conventional lighting.

Versions



Smart Post top G3 BGP161

Dimensional drawing

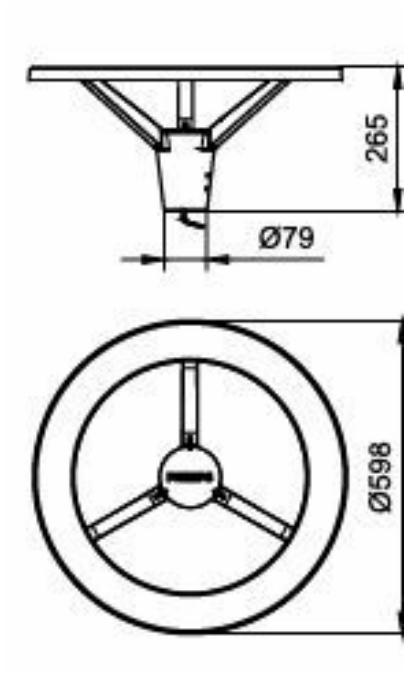

Smart Post-top G3 - 2300 lm - 27 W - 3000 K

General Information

Lamp family code	-
Light source replaceable	Yes
Number of gear units	1 unit
Driver included	Yes

Light Technical

Upward light output ratio	0
Color rendering index (CRI)	70
Luminaire light beam spread	-
Optic type outdoor	Symmetrical

Operating and Electrical

Surge Protection (Common/Differential)	4/2 kV kV

Controls and Dimming

Dimmable	No
Maximum dim level	Not applicable

Mechanical and Housing

Housing Color	Dark gray
Ingress protection code	IP65 [Dust penetration-protected, jet-proof]
Mech. impact protection code	IK07 [2 J reinforced]
Standard tilt angle posttop	-
Standard tilt angle side entry	-
Optical cover type	Acrylate cover and semi-matt high-reflective optic

Approval and Application

Flammability mark	-
CE mark	No

Light Technical

Order Code	Full Product Name	Luminous Flux	Correlated Color Temperature (Nom)	Light source color
911401633703	BGP161 LED2500/NW PSU 220-240V 7043 IN	2,500 lm	4000 K	Neutral white
911401633903	BGP161 LED2300/WW PSU 220-240V 7043 IN	2,300 lm	3000 K	Warm white

Operating and Electrical

Order Code	Full Product Name	Power Consumption
911401633703	BGP161 LED2500/NW PSU 220-240V 7043 IN	29 W
911401633903	BGP161 LED2300/WW PSU 220-240V 7043 IN	27 W

© 2026 Signify Holding. All rights reserved. The information provided herein is subject to change, without notice. Signify does not give any representation or warranty as to the accuracy or completeness of the information included herein and shall not be liable for any action in reliance thereon. The information presented in this document is not intended as any commercial offer and does not form part of any quotation or contract, unless otherwise agreed by Signify. Philips and the Philips Shield Emblem are registered trademarks of Koninklijke Philips N.V.