PHILIPS

**RC091V LED30S/840 PSU W60L60 G4**

911401863885



# Philips SmartBright Slim Panel RC091, 100 lm/W, 840 neutral white

The Philips SmartBright range is comprised of a selection of essential LED luminaires that come with Philips high levels of quality at a competitive price. Reliable, energy efficient and affordable lighting solutions that you can count on to deliver what they promise. Philips SmartBright Slim Panels are our most affordable LED solution. The complete product family is available in multiple mounting types, product dimensions and lumen options to suit the widest range of applications. And thanks to the edge-lit structure, SmartBright panels deliver both higher system efficacy and excellent lighting uniformity. The essential range of LED slim panels for everyday installations.

## General Information

| | |
|---|---|
| Gear | - |
| Driver included | Yes |
| Light source engine type | LED |
| Value ladder | Value |

## Light Technical

| | |
|---|---|
| Luminous Flux | 3,000 lm |
| Correlated Color Temperature (Nom) | 4000 K |
| Luminous Efficacy (rated) (Nom) | 100 lm/W |
| Color rendering index (CRI) | >80 |
| Beam angle of light source | 120 degree(s) |
| Light source color | 840 neutral white |
| Unified glare rating CEN | 22 |
| Effective projected area | 0.36 $m^2$ |

## Operating and Electrical

| | |
|---|---|
| Input Voltage | 222 to 240 V |
| Line Frequency | 50 or 60 Hz |
| Power Consumption | 30 W |
| Power Factor (Fraction) | 0.9 |
| Connection | - |
| Cable | - |
| Number of products on MCB of 16 A type B | - |
| Protection class IEC | Safety class II |

## Controls and Dimming

| | |
|---|---|
| Dimmable | - |
| Control interface | - |

## Mechanical and Housing

| | |
|---|---|
| Housing Material | Aluminum |
| Optical cover material | Polystyrene |
| Housing Color | Aluminum |
| Optical cover finish | Matte |
| Ingress protection code | IP20/40 [Finger-protected, Emitting surface] |
| Mech. impact protection code | IK02 [0.2 J standard] |
| Optical cover type | Polymethyl methacrylate bowl/ cover |
| Net Weight (Piece) | 1.900 kg |

## Dimensional drawing

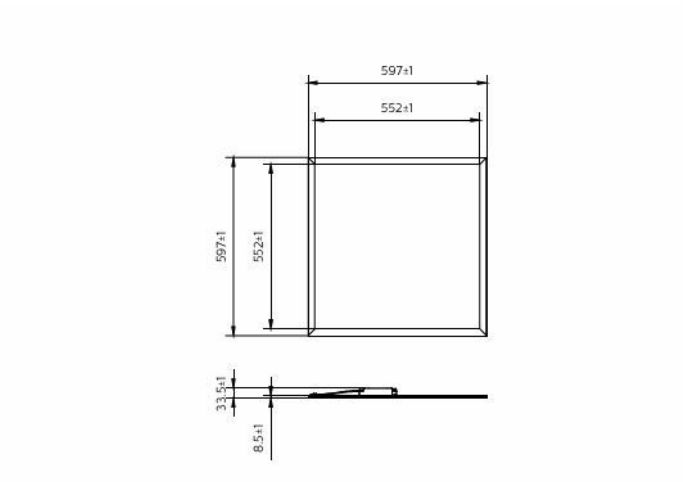


## Approval and Application

| | |
|---|---|
| Glow-wire test | Temperature 650 °C, duration 30 s |
| Flammability mark | For mounting on normally flammable surfaces |
| CE mark | No |
| ENEC mark | - |
| EU RoHS compliant | Yes |
| Ambient temperature range | -10 to +35 °C |

## Initial Performance (IEC Compliant)

| | |
|---|---|
| Luminous flux tolerance | -10%,+15% |
| Initial chromaticity | (0.3818,0.3797)SDCM<5 |
| Power consumption tolerance | +/-15% |

## Product Data

| | |
|---|---|
| Order product name | RC091V LED30S/840 PSU W60L60 G4 |
| Full product name | RC091V LED30S/840 PSU W60L60 G4 |
| Full product code | 692382867058099 |
| Order code | 911401863885 |
| Material Nr. (12NC) | 911401863885 |
| Numerator - Quantity Per Pack | 1 |
| EAN/UPC - Product/Case | 6923828670580 |
| Numerator - Packs per outer box | 6 |
| EAN/UPC - Case | 6923828670580 |

## Related Documents

| Documents and certificates | Document Name | Download |
|---|---|---|
| Installation Instructions | RC091-MI-GC-INI.pdf | Download |

| Photometry and lighting design | Document Name | Download |
|---|---|---|
| IES File | RC091-LED30S-6060-IES.ies | Download |

© 2026 Signify Holding. All rights reserved. The information provided herein is subject to change, without notice. Signify does not give any representation or warranty as to the accuracy or completeness of the information included herein and shall not be liable for any action in reliance thereon. The information presented in this document is not intended as any commercial offer and does not form part of any quotation or contract, unless otherwise agreed by Signify. Philips and the Philips Shield Emblem are registered trademarks of Koninklijke Philips N.V.