PHILIPS

Apex Ceiling light

8196748



Comfortable LED ceiling light that's easy on your eyes

With its EyeComfort design, Apex provides comfortable high quality LED light for home and residential project. Its long lifetime and high lumen maintenience ensures bright light level over time. With various shapes, sizes, it enables to serve from bedroom to big living room, and dining to kitchen space. Installation becomes easier with easy connector and installation bracket.

Benefits

- Ensure comfortable LED light all around home, residential application
- Hassle free easy installation saves time and effort
- Stay bright along the long life time

Applications

- Residential, home: living room, bedroom, dining room, kitchen

Features

- high quality LED light with EyeComfort feature, safe from Blue light hazard risk
- Easy to install with easy connector and bracket
- various models and size to fit for all rooms in residential application

- long lifetime of 20,000 hours with high lumen maintanience
- uniform light distribution

Versions

Ceiling APEX S LED 25W



Ceiling APEX RT LED 40W

Ceiling APEX L LED 45W



Ceiling APEX SQ LED 55W

Dimensional drawing

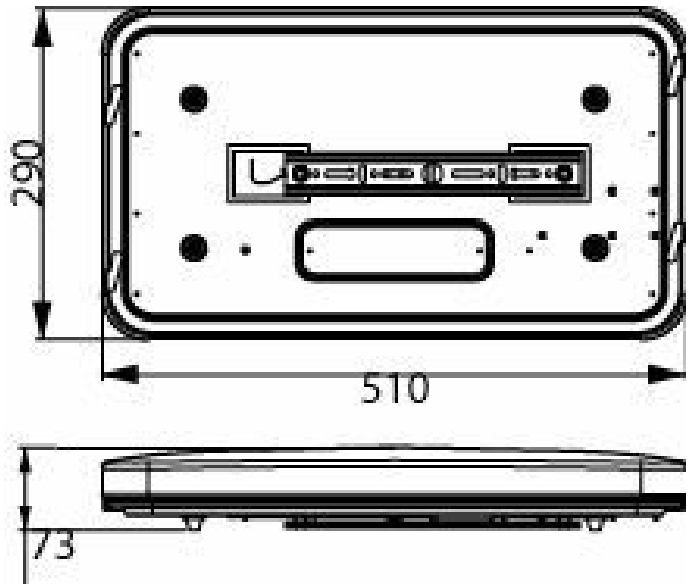

Apex RT LED 40W 5700K

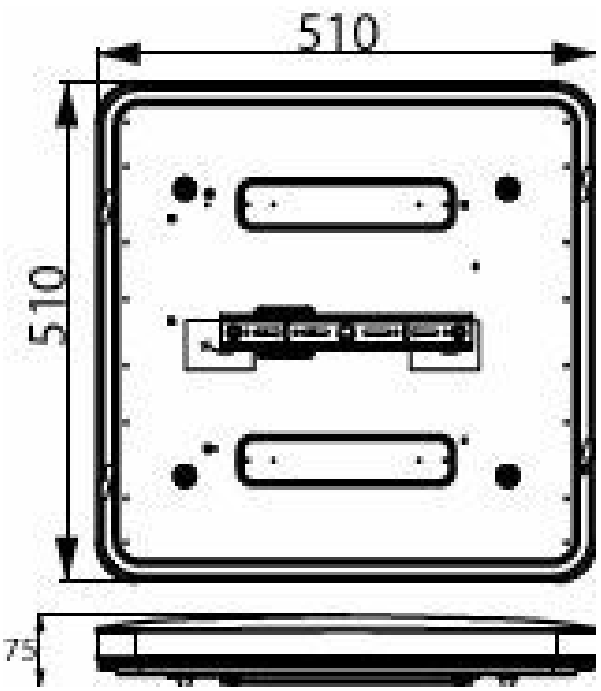

Apex SQ LED 55W 5700K



Apex L LED 45W 5700K

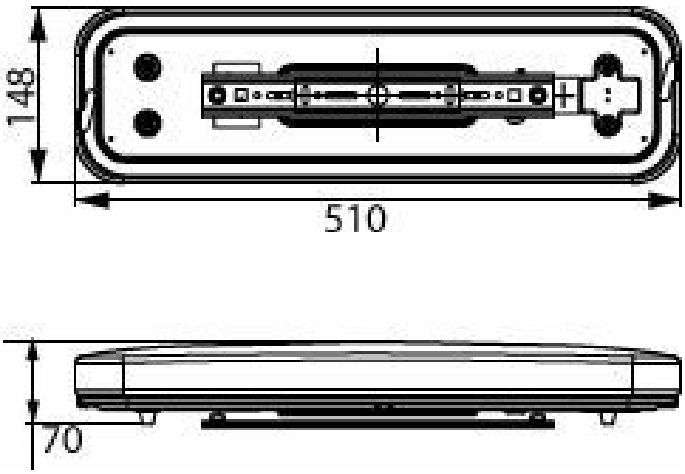

Apex S LED 25W 5700K

Product details



Ceiling APEX RT LED 40W ON 1-DPP



Ceiling APEX L LED 45W ON 1-DPP

Ceiling APEX S LED 25W ON 2-DPP

Ceiling APEX S LED 25W ON 1-DPP



Ceiling APEX SQ LED 55W ON 1-DPP



Ceiling APEX RT LED 40W ON 2-DPP



Ceiling APEX L LED 45W ON 2-DPP



Ceiling APEX SQ LED 55W ON 2-DPP

General Information

Light source replaceable	No

Light Technical

Correlated Color Temperature (Nom)	5700 K
Color rendering index (CRI)	80

Operating and Electrical

Input Voltage	220 to 240 V
Line Frequency	50 or 60 Hz
Protection class IEC	Safety class I

Controls and Dimming

Dimmable	No

Mechanical and Housing

Housing Color	White
Ingress protection code	IP20 [Finger-protected]

Approval and Application

Flammability mark	For mounting on normally flammable surfaces
Ambient temperature range	-20 to +40 °C

Initial Performance (IEC Compliant)

Initial chromaticity	(0.3287, 0.3425) 6

Light Technical

Order Code	Full Product Name	Luminous Flux	Luminous Efficacy (rated) (Nom)
929002612481	Apex S LED 25W 5700K	2,200 lm	88.00 lm/W
929002612681	Apex RT LED 40W 5700K	3,400 lm	85.00 lm/W
929002612881	Apex L LED 45W 5700K	4,000 lm	88.00 lm/W
929002613281	Apex SQ LED 55W 5700K	4,200 lm	84.00 lm/W

Operating and Electrical

Order Code	Full Product Name	Power Consumption
929002612481	Apex S LED 25W 5700K	25 W
929002612681	Apex RT LED 40W 5700K	40 W
929002612881	Apex L LED 45W 5700K	45 W
929002613281	Apex SQ LED 55W 5700K	55 W

© 2026 Signify Holding. All rights reserved. The information provided herein is subject to change, without notice. Signify does not give any representation or warranty as to the accuracy or completeness of the information included herein and shall not be liable for any action in reliance thereon. The information presented in this document is not intended as any commercial offer and does not form part of any quotation or contract, unless otherwise agreed by Signify. Philips and the Philips Shield Emblem are registered trademarks of Koninklijke Philips N.V.