PHILIPS

DN058B LED6/865 220-240V D100 RD

911401805088



SmartBright CNG Downlight DN058, 6.2 W, 600 lm, 6500 K, Symmetric 110º, Matte, IP20 | Finger-protected

SmartBright CNG downlight series products offer reliable lighting performance with long lifetime and meet all the IEC safety regulation requirements. Products have multiple installation, including both recessed and surface mount. Products also have different shapes as options, round and square shape can meet different customer's requirement. Products have three CCT options with different cut out solutions. Products have no harm to eyes and give eyeconfort experience.

General Information

Number of gear units	1 unit
Gear	EB [Electronic]
Driver included	Yes
Light source engine type	LED
Value ladder	Value
Warranty period	1 years

Light Technical

Luminous Flux	600 lm
Correlated Color Temperature (Nom)	6500 K
Luminous Efficacy (rated) (Nom)	94 lm/W
Color rendering index (CRI)	>80
Number of light sources	1
Beam angle of light source	110 degree(s)
Light source color	865 cool daylight
Optic type	Symmetric 110º
Luminaire light beam spread	110°
Unified glare rating CEN	30
Effective projected area	0.75 m²

Operating and Electrical

Input Voltage	220-240 V
Line Frequency	50 or 60 Hz

Inrush current	4.78 A
Inrush time	0.076 ms
Power Consumption	6.2 W
Power Factor (Fraction)	0.5
Connection	Flying leads/wires
Cable	2×0.75mm²
Number of products on MCB of 16 A type B	300
Suitable for random switching	No
Protection class IEC	Safety class II

Controls and Dimming

Dimmable	No
Control interface	-
Maximum dim level	Not applicable

Mechanical and Housing

Housing Material	Polypropylene
Reflector material	-
Optic material	Polystyrene
Optical cover material	Polystyrene
Housing Color	White RAL 9003
Mounting device	Recessed mounting box round
Optical cover finish	Matte
Overall height	30 mm
Overall diameter	115 mm
Ingress protection code	IP20 [Finger-protected]
Mech. impact protection code	IK03 [0.3 J]
Optical cover type	PS
Net Weight (Piece)	0.050 kg

Approval and Application

Glow-wire test	Temperature 650 °C, duration 30 s
Flammability mark	For mounting on normally flammable surfaces
CE mark	Yes
ENEC mark	-
Photobiological risk	Photobiological risk group 0 @200mm to EN62778
Photobiological risk specification	0.2 m
EU RoHS compliant	Yes
Performance ambient temperature Tq	25 °C
Ambient temperature range	-20 to +40 °C

Initial Performance (IEC Compliant)

Luminous flux tolerance	+/-10%
Initial chromaticity	(0.31,0.33) SDCM≤6
Power consumption tolerance	+/-10%

Product Data

Order product name	DN058B LED6/865 220-240V D100 RD
Full product name	DN058B LED6/865 220-240V D100 RD
Full product code	872110331853499
Order code	911401805088
Material Nr. (12NC)	911401805088
Numerator - Quantity Per Pack	1
EAN/UPC - Product/Case	8721103318534
Numerator - Packs per outer box	40
EAN/UPC - Case	8721103319401

Dimensional drawing

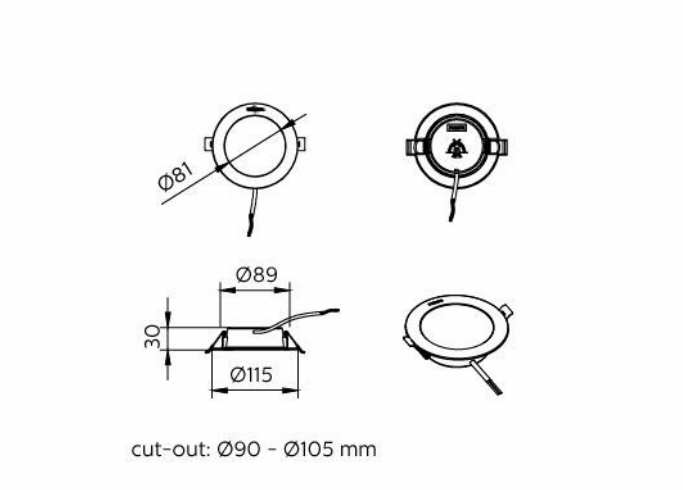

© 2026 Signify Holding. All rights reserved. The information provided herein is subject to change, without notice. Signify does not give any representation or warranty as to the accuracy or completeness of the information included herein and shall not be liable for any action in reliance thereon. The information presented in this document is not intended as any commercial offer and does not form part of any quotation or contract, unless otherwise agreed by Signify. Philips and the Philips Shield Emblem are registered trademarks of Koninklijke Philips N.V.